Contents

8 - Opto-electronic rotary encoders OsiSense XCC

Selection guide . . . . . *page 8/2*

■ **General**
- Incremental encoder, absolute coder: principle . . . . . *page 8/4*
- Binary coding, Gray coding . . . . . *page 8/6*
- Characteristics required to define an encoder . . . . . *page 8/7*
- Installation precautions . . . . . *page 8/8*

Incremental encoders

■ **Ø 40 mm encoders**
- Characteristics and schemes. . . . . *page 8/10*
- References . . . . . *page 8/11*
- Dimensions and connections. . . . . *pages 8/18 to 8/20*

■ **Ø 58 mm encoders, aluminium and stainless steel**
- Characteristics and schemes. . . . . *page 8/12*
- References . . . . . *page 8/14*
- Dimensions and connections. . . . . *pages 8/18 to 8/20*

■ **Ø 90 mm encoders**
- Characteristics and schemes. . . . . *page 8/16*
- References . . . . . *page 8/17*
- Dimensions and connections. . . . . *pages 8/18 to 8/20*

Single turn absolute encoders

■ **Ø 58 mm encoders, aluminium and stainless steel**
- Characteristics and schemes. . . . . *page 8/22*
- References . . . . . *page 8/23*
- Dimensions and connections. . . . . *page 8/26*

■ **Ø 90 mm encoders**
- Characteristics and schemes. . . . . *page 8/24*
- References . . . . . *page 8/25*
- Dimensions and connections. . . . . *page 8/26*

Multiturn absolute encoders

■ **Ø 58 mm encoders, aluminium and stainless steel**
- Characteristics and schemes. . . . . *page 8/28*
- References . . . . . *page 8/29*
- Dimensions and connections. . . . . *page 8/32*

■ **Ø 90 mm encoders**
- Characteristics and schemes. . . . . *page 8/30*
- References . . . . . *page 8/31*
- Dimensions and connections. . . . . *page 8/32*

Rotary encoders

- Characteristics. . . . . *page 8/36*
- References . . . . . *page 8/37*
- Dimensions and connections. . . . . *page 8/38*

Multiturn absolute encoders on bus

■ **CANopen Ø 58 mm encoders**
- Presentation . . . . . *page 8/42*
- References . . . . . *page 8/44*
- Dimensions and connections. . . . . *page 8/45*

■ **PROFIBUS-DP Ø 58 mm encoders**
- Presentation . . . . . *page 8/46*
- References . . . . . *page 8/48*
- Dimensions and connections. . . . . *page 8/49*

Opto-electronic rotary encoders
OsiSense XCC

Encoder type			**Incremental encoders**			
Applications			**Counting indication**			
Diameter of housing			Ø 40 mm	Ø 58 mm	Ø 58 mm parameterable (multi-resolution) *(1)*	Ø 90 mm
Shaft		Solid	Ø 6 mm	Ø 6 mm and Ø 10 mm *(3)*	Ø 10 mm	Ø 12 mm
		Through	Ø 6 mm	Ø 14 mm Ø 6, 8, 10 and 12 mm (with reduction collar)	Ø 14 mm Ø 6, 8, 10 and 12 mm (with reduction collar)	Ø 30 mm Ø 12, 20 and 25 mm (with reduction collar)
Resolution	Incremental encoders	100 points	100 points	100 points	–	100 points
		256 points	–	–	256 to 4096 points	–
		360 points	360 points	360 points *(3)*	360 to 5760 points	360 points
		500 points	500 points	500 points	500 to 8000 points	500 points
		1000 points	1000 points	1000 points	–	1000 points
		1024 points	1024 points	1024 points *(3)*	1024 to 16,384 points	1024 points
		2500 points	–	2500 points	–	2500 points
		3600 points	–	–	–	3600 points
		4096 points	–	–	–	–
		5000 points	–	5000 points *(3)*	5000 to 80,000 points	5000 points
		10,000 points	–	–	–	10,000 points
	Absolute encoders	4096 points/8192 turns (12-bit/13-bit)	–	–	–	–
		8192 points (13-bit)	–	–	–	–
		8192 points/4096 turns (13-bit/12-bit)	–	–	–	–
Output stage Supply *(2)*	Incremental encoders	Type R (N)	5 V, RS 422, 4.5…5.5 V	–	–	–
		Type K (N)	Push-pull, 11…30 V	–	–	Push-pull, 11…30 V
		Type X	–	5 V, RS 422, 4.75…30 V	5 V, RS 422, 4.75…30 V	–
		Type Y	–	Push-pull, 5…30 V *(3)*	Push-pull, 5…30 V	–
	Absolute encoders	Type KB (N) or KG (N)	–	–	–	–
		Type SB (N) or SG (N)	–	–	–	–
		Type C	–	–	–	–
		Type F	–	–	–	–
Connection		Pre-cabled, radial or axial	●	● (for stainless steel versions only)	–	–
		Connector, radial, M23	–	●	●	●
		Terminal block, radial	–	–	–	–
Type reference			**XCC14●●●●●**	**XCC15●●●●●**	**XCC15●●●●M●●●**	**XCC19●●●●●**
Pages			8/11	8/13 to 8/15		8/17

(1) Parameterable version: multiplication of the basic resolution of the disc using dip switches, the factory setting being that of the lowest value.
(2) Characteristics of the output stage/supply types:
- ***Type R** (N): 5 V output driver, RS 422, 4.5…5,5 V. **Type K** (N): push-pull output driver, 11…30 V.*
- ***Type X**: 5 V output driver, RS 422, 4.75…30 V. **Type Y**: push-pull output driver, 5…30 V.*
- *KB (N) or KG (N) output: push-pull output driver, 11…30 V, binary code KB (N) or Gray code KG (N).*

Single turn absolute encoders		Multiturn absolute encoders			Accessories for encoders
Absolute position indication within a revolution		Absolute position indication within a revolution and indication of the number of revolutions		Fieldbus: CANopen, PROFIBUS-DP	
Ø 58 mm	Ø 90 mm	Ø 58 mm	Ø 90 mm	Ø 58 mm	- Shaft couplings with spring, - anti-rotation devices, - reduction collars, - pre-wired connectors, - etc.
Ø 6 mm and Ø 10 mm *(3)*	Ø 12 mm	Ø 6 mm and Ø 10 mm *(3)*	Ø 12 mm	Ø 10 mm	
Ø 14 mm Ø 6, 8, 10 and 12 mm (with reduction collar)	Ø 30 mm Ø 12, 20 and 25 mm (with reduction collar)	Ø 14 mm Ø 6, 8, 10 and 12 mm (with reduction collar)	Ø 30 mm Ø 16, 20 and 25 mm (with reduction collar)	Ø 15 mm (hollow shaft) Ø 6, 8, 10, 12 and 14 mm (with reduction collar)	
–	–	–	–	–	
–	–	–	–	–	
–	–	–	–	–	
–	–	–	–	–	
–	–	–	–	–	
–	–	–	–	–	
–	–	–	–	–	
–	–	–	–	–	
–	–	–	–	–	
–	–	–	–	–	
–	–	–	–	–	
–	–	4096 points/8192 turns *(3)*	–	–	
8192 points *(3)*	8192 points	–	–	–	
–	–	8192 points/4096 turns	8192 points/4096 turns	8192 points/4096 turns	
–	–	–	–	–	
–	–	–	–	–	
–	–	–	–	–	
–	–	–	–	–	
Push-pull, binary or Gray, 5 …30 V or 11…30 V *(3)*	Push-pull, binary or Gray, 11…30 V,	–	–	–	
SSI, 13-bit, binary or Gray 5…30 V or 11…30 V *(3)*	SSI, 13-bit, binary or Gray 11…30 V	SSI, 25-bit, binary or Gray 5…30 V or 11…30 V *(3)*	SSI, 25-bit, binary or Gray 11…30 V	–	
–	–	–	–	11…30 V, CANopen	
–	–	–	–	11…30 V, PROFIBUS-DP	
● (for stainless steel encoders only)	–	● (for stainless steel encoders only)	–	–	
●	●	●	●	●	
–	–	–	–	●	
XCC25●●●●●	**XCC29●●●●●**	**XCC35●●●●●**	**XCC39●●●●●**	**XCC35●●●●●CBN** **XCC35●●●●●FBN**	**XCCR, XCCP, XZC**
8/23	8/25	8/29	8/31	8/44 and 8/48	8/35 to 8/37, 8/50 and 8/51

(2) Characteristics of the output stage/supply types (continued):
- ***Type SB*** *(N) or* ***SG*** *(N): SSI output without parity, 13-bit or 25-bit, 5…30 V or 11…30 V, binary code SB (N) or Gray code SG (N).*
- ***Type KB*** *(N) or* ***KG*** *(N): push-pull output driver, 5…30 V or 11…30 V, binary code KB (N) or Gray code KG (N) with multiturn connecting cable.*
- ***Type C****: binary CANopen serial link.* ***Type F****: binary PROFIBUS serial link, RS 485.*

(3) For all encoders versions (including stainless steel versions).

Opto-electronic rotary encoders
OsiSense XCC

Applications

The increase in the power of processing systems, coupled with the requirements for high productivity, has created the need for continuous information in all areas of production regarding:
- counting, positioning by counting,
- absolute positioning,
- speed control.

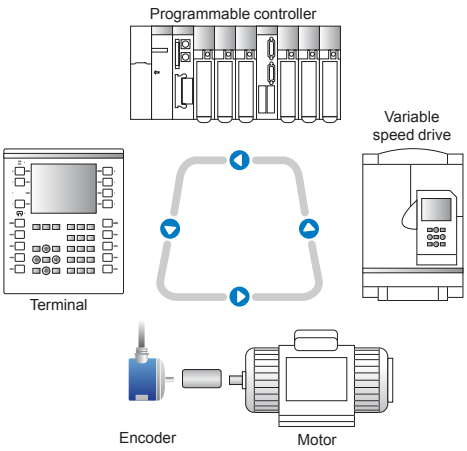

Example

The positioning of a moving part is fully controlled by the processing system via the encoder.

- Processing units
please refer to our “Premium automation platform” catalogue.

- Variable speed drives
please refer to our “Variable speed drives and starters” catalogue.

Principle of the opto-electronic rotary encoder

The opto-electronic rotary encoder is an angular position sensor.

Mechanically coupled to a driving spindle of a machine, the shaft of the encoder rotates a disc that comprises a succession of opaque and transparent sectors.

Light from light emitting diodes (LEDs) passes through the transparent sectors of the disc as they appear and is detected by photosensitive diodes.

The photosensitive diodes, in turn, generate an electrical signal which is amplified and converted into a digital signal before being transmitted to a processing system or an electronic variable speed drive.

The electrical output of the encoder therefore represents, in digital form, the angular position of the input shaft.

Types of opto-electronic rotary encoder

- Incremental encoders:
Counting, positioning by counting, speed.
- Parameterable incremental encoders:
Multiplication of the basic resolution of the disc using dip switches (the factory setting being that of the lowest value).
- Single turn and multiturn absolute encoders:
Absolute positioning.
- Fieldbus multiturn absolute encoders:
CANopen and PROFIBUS-DP.

Opto-electronic rotary encoders
OsiSense XCC

Incremental encoder

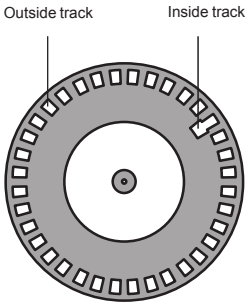

Principle

The disc of an incremental encoder comprises 2 types of track:
■ one or several outside tracks (channels A and B), comprising “n” equal angular steps that are alternately opaque and transparent, with “n” being the resolution or number of periods of the encoder,
■ an inside track comprising a single window, which serves as the reference point and enables reinitialisation at each revolution (top 0).

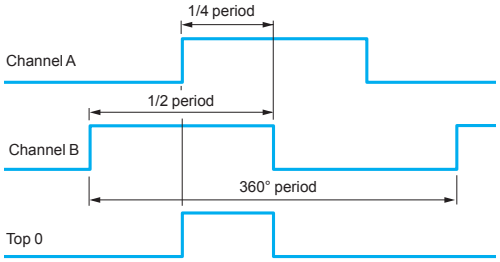

Schemes and settings

The operation of the photosensitive elements (LEDs + photosensitive diodes) is based on the real-time differential optical reading principle:
■ the photosensitive elements of tracks A and B are offset so that each will simultaneously read only its respective slot (channels A and B are 90° electrically offset),
■ the electronics operate following the principle of real-time differential measurement.

Channel B (rising edge) arriving before A in the clockwise direction viewed from base side.

Period: 360° electrical.
Cyclic ratio: 180° electrical ± 10%.
Phase displacement: 90° electrical ± 25%.

Advantages of real-time differential optical reading

Reading by offset photosensitive elements
■ Radial play of encoder shaft greater than 30%, which is higher than traditional optical reading encoders.
■ Maintains a phase displacement of channels A and B within the tolerance limits of the unit.

Triple light source emission
■ Maintains cyclic ratio, even in the event of:
- failure of one of the 3 light sources,
- diminishing efficiency of the light sources (up to 30%),
- fine dust deposit on the optical components, reducing signal strength of the photosensitive elements (up to 30%).

These advantages are the reliability factors of the XCC encoders.

Absolute encoder

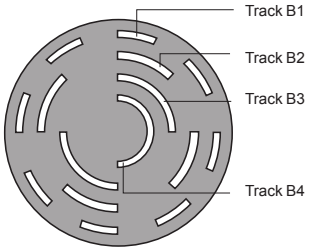

Binary disc

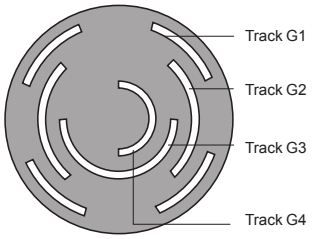

Gray disc

Principle

The disc of an absolute encoder comprises “n” concentric tracks, equally divided into alternate opaque and transparent segments, and each track has its own transmitter and receiver.

The inside track is half opaque and half transparent. Reading of this MSB (Most Significant Bit) track determines in which half-turn the encoder is situated.

The next track is divided into 4 quarters, alternately opaque and transparent. The reading of this track, in conjunction with the previous track, determines in which quarter-turn the encoder is situated.

The following tracks enable successive determination of which eighth-turn, sixteenth-turn, etc. the encoder is situated.

The outside track corresponds to the LSB (Least Significant Bit) and provides the final accuracy. It has 2^n points corresponding to the resolution of the encoder. Therefore, for each angular position of the shaft, the disc provides a code. This code can either be binary or Gray.
Following one complete revolution of the encoder, the same coded values are repeated.
The multiturn absolute encoder, in addition to providing the digital position within the revolution, also provides the total number of revolutions.

Absolute encoder *(continued)*

Binary coding

The binary code is directly usable by processing systems (programmable controllers for example) in order to execute calculations or comparisons, but has the disadvantage of having several bits which change state between 2 positions.

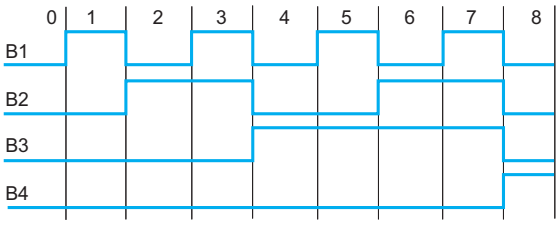

Gray coding

The Gray code offers the advantage of only changing one bit between 2 consecutive numbers.

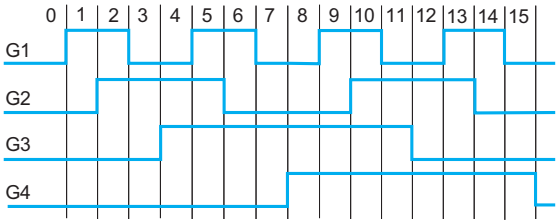

Example of Gray code disc

	0	1	2	3	4	5	6	7	8	9	10	11	12	13	14	15	16	17	18	19	20	21	22	23	24
2^0	0	1	1	0	0	1	1	0	0	1	1	0	0	1	1	0	0	1	1	0	0	1	1	0	0
2^2	0	0	1	1	1	1	0	0	0	0	1	1	1	1	0	0	0	0	1	1	1	1	0	0	0
2^4	0	0	0	0	1	1	1	1	1	1	1	1	0	0	0	0	0	0	0	0	1	1	1	1	1
2^8	0	0	0	0	0	0	0	0	1	1	1	1	1	1	1	1	1	1	1	1	1	1	1	1	0
2^{16}	0	0	0	0	0	0	0	0	0	0	0	0	0	0	0	0	1	1	1	1	1	1	1	1	1

Representation of the first 24 decimal values corresponding to the reading of the first 5 tracks.

Advantages of position detection by an absolute encoder

An absolute encoder continuously provides a code that is an image of the actual position of the moving object being monitored.

On power-up, or restart following a supply failure, the encoder provides data that is directly exploitable by the processing system.

Opto-electronic rotary encoders

Characteristics required to define an encoder

7 characteristics to be established

1 Function

■ Incremental encoder
Provides counting indication.

■ Single turn absolute encoder
Provides absolute position within each revolution.

■ Multiturn absolute encoder
Provides absolute position within each revolution and indicates total number of revolutions.

2 Diameter of housing

■ Incremental encoders
Ø 40, 58 and 90

■ Single turn and multiturn absolute encoders
Ø 58 and 90

3 Diameter of shaft

■ Ø 6 mm to 30 mm, depending on model
■ Reduction collars
For Ø 58 and 90 mm encoders, with Ø 14, 15 and 30 mm through shaft, reduction collars are available to reduce the diameters:
- from 14 to 6, 8, 10 and 12
- from 15 to 6, 8, 10, 12 and 14
- from 30 to 12, 16, 20 and 25.

4 Type of shaft

■ Solid shaft
The shaft of the encoder is mechanically linked to a drive shaft using a flexible coupling, which eliminates alignment inaccuracies.

■ Through shaft/Hollow shaft
The encoder is mounted directly on the drive shaft. A flexible mounting kit prevents encoder rotation and compensates for alignment inaccuracies.

5 Connection method

■ Pre-cabled with 2 m long shielded cable or M23/M12 connector.
■ Radial type connection.

6 Resolution

■ Number of points per revolution.
■ Number of revolutions (for multiturn absolute encoders).
■ On Ø 58 parameterable incremental encoders, this resolution can be adjusted using dip switches (multiplication factor up to 16 times on 9 basic resolutions).

7 Type of output

■ Incremental encoders
5 V output driver, RS 422, 4.75…30 V.
Push-pull output driver, 5…30 V, 11...30 V.

■ Single turn absolute encoders (depending on model)
Push-pull output driver, 11…30 V, binary code or Gray code.
SSI output without parity, 13-bit clock, 11…30 V, binary code or Gray code.

■ Multiturn absolute encoders (depending on model)
SSI output without parity, 25-bit clock, 11…30 V, binary code or Gray code.

■ Parallel outputs obtainable using converter connecting cables
The SSI versions can be converted to a parallel version by using the deserialisation connecting cable (see page 8/35).

■ Multiturn absolute encoders, communicating version, fieldbus:
□ CANopen: 11...30 V (see page 8/42).
□ PROFIBUS-DP: 11...30 V (see page 8/46).

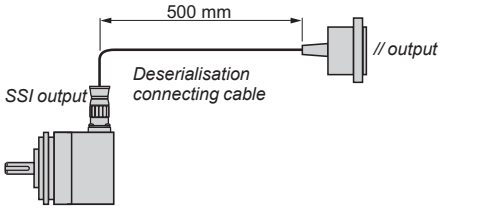

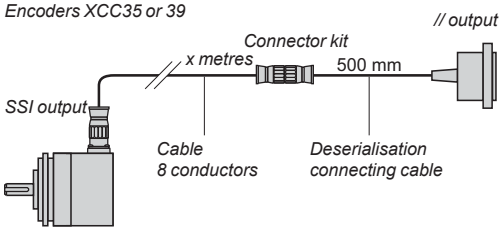

Installation precautions

Type of cables

In an environment subject to considerable electrical interference, it is recommended that cables with several twisted pairs, reinforced by general shielding, be used.

For the signals, it is recommended that standard 0.14 mm^2/0.22 mm^2 conductors be used.

For 5 V supply encoders.
Due to line voltage drops, it is recommended that the 0 V and + V supply cables have the following minimum cross-sectional areas:
- 0.14 mm^2 if the encoder-supply distance is less than 30 m,
- 0.22 mm^2 if the encoder-supply distance is greater than 30 m.

Cabling

Separate, by as much as possible, the connecting cables to encoders and power cables. Also, avoid parallel cable runs. Maintain a distance of at least 20 cm and, in the event of cables crossing, ensure that the crossovers are at right-angles.

When using cables with twisted pairs (shielded or non shielded) group signal cables in common pairs.

In environments subject to electrical interference, it is recommended to earth the encoder base using one of the fixing screws.

Connect the control inputs to a potential (absolute encoder).
Connect all 0 V connections back to a star point, i.e. only one and same referential.
Earth the shielding throughout 360° using tap-off braids. This is to be done at both ends of each cable. To earth the shielding use at least 4 mm^2 cable.
As much as possible, earth the 0 V of the supply to the encoders on the supply side.
Maximum frequency of signals for SSI depending on distance:
Indicative values that can vary depending on the cable characteristics.

Distance (m)	Frequency (kHz)
50	400
100	300
200	200
400	100

Supply

It is imperative that regulated and smoothed power supplies, with a ripple factor on 24 V of 500 mV and on 5 V of 200 mV, are used that are specifically for the encoder. Schneider Electric ABL7 range power supplies are available. Please refer to the website: www.schneider-electric.com.
For 5…30 V encoders, the supply via a transformer with a 24 V rms rectified and smoothed secondary is prohibited, since the DC voltage obtained is higher than the supply voltage limits of the encoder.
Prior to powering-up for the first time, ensure that the rated supply voltage of the encoder is suitable for the supply.

Opto-electronic rotary encoders

Characteristics required to define an encoder, installation, powering-up

Connection and powering-up precautions

Connection

The plugging-in or unplugging of a connector version encoder must only be done whilst the supply is disconnected.

Encoder supplied by central unit:
- disconnect supply to central unit,
- proceed with connection or disconnection,
- re-establish supply to central unit.

Encoder supplied by source external to central unit:
- disconnect supply to central unit, then disconnect supply to encoder,
- proceed with connection or disconnection,
- re-establish supply to encoder, then re-establish supply to central unit.

Powering-up

For synchronisation reasons, the powering-up or switching-off of the encoder must coincide with that of its associated electronics.

Incremental encoders

OsiSense XCC

Ø 40 mm encoders

Environment

Encoder type			XCC1406P●●●●	XCC1406T●●●●
Conformity			CE	
Temperature	Operation (housing)	**°C**	- 20…+ 80	
	Storage	**°C**	- 30…+ 85	
Degree of protection	Conforming to IEC 60529		IP 54	IP 52
Vibration resistance	Conforming to IEC 60068-2-6		10 gn (f = 10…500 Hz)	
Shock resistance	Conforming to IEC 60068-2-27		30 gn, duration 11 ms	
Resistance to electromagnetic interference	Electrostatic discharges		Conforming to IEC 61000-4-2: level 3, 8 kV air; 4 kV contact	
	Radiated electromagnetic fields (electromagnetic waves)		Conforming to IEC 61000-4-3: level 3, 10 V/m	
	Fast transients (Start/Stop interference)		Conforming to IEC 61000-4-4: level 3, 2 kV (1 kV for inputs/outputs)	
	Surge withstand		Conforming to IEC 61000-4-5: level 2, 1 kV	
Materials	Base		Aluminium or Zamak	
	Housing		Aluminium or Zamak	
	Shaft		Stainless steel or aluminium	
	Ball bearings		688AZZ1	

Mechanical characteristics

Shaft type		**mm**	Ø 6, solid shaft (g7)	Ø 6, through shaft (H7)
Maximum rotational speed	Continuous		9000 rpm	
Shaft moment of inertia		**g.cm²**	10	5
Torque		**N.cm**	0.2	0.25
Maximum load	Radial	**daN**	2	
	Axial	**daN**	1	

Electrical characteristics

Connection			Radial: pre-cabled, 8 x 0.14 mm² shielded, Ø ext = 6 mm, length = 2 m Crimped metal cable entry	Pre-cabled 8 x 0.14 mm² shielded, Ø ext = 6 mm, length = 2 m Crimped metal cable entry
Frequency		**kHz**	100	
Number of channels			3 channels: A, B, top 0 and complements $\overline{A}$,$\overline{B}$, $\overline{0}$	
Encoders with type R output stage: 5 V output driver, RS 422, 4.5…5.5 V supply				
Supply voltage			⎓ 5 V ± 10% Maximum ripple: 200 mV	
Current consumption, no-load		**mA**	100 maximum	
Output current		**mA**	40 maximum	
Output levels	Low level		0.5 V maximum (Is = 20 mA)	
	High level		2.5 V minimum (Is = 20 mA)	
Encoders with type K output stage: push-pull output driver, 11…30 V supply				
Supply voltage			⎓ 11 V…30 V. Maximum ripple: 500 mV	
Current consumption, no-load		**mA**	75 maximum	
Protection			Against short-circuits and reverse polarity	
Output current		**mA**	40 maximum	
Output levels	Low level		1.5 V maximum (Is = 20 mA)	
	High level		V supply - 3 V minimum (Is = 20 mA)	

Schemes

Type R output stage

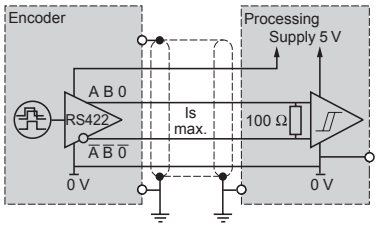

Type K output stage

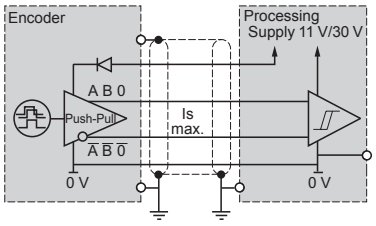

References: page 8/11
Dimensions: page 8/18
Connections: pages 8/20 and 8/21

Incremental encoders

OsiSense XCC

Ø 40 mm encoders

105160

XCC1406PR●●●

Solid shaft, Ø 6 mm

Resolution	Connection method	Output stage type *(1)*	Supply voltage	Reference	Weight kg
100 points	Pre-cabled, radial L = 2 m	5 V, RS 422	4.5…5.5 V	**XCC1406PR01R**	0.355
		Push-pull	11…30 V	**XCC1406PR01K**	0.355
360 points	Pre-cabled, radial L = 2 m	5 V, RS 422	4.5…5.5 V	**XCC1406PR03R**	0.355
		Push-pull	11…30 V	**XCC1406PR03K**	0.355
500 points	Pre-cabled, radial L = 2 m	5 V, RS 422	4.5…5.5 V	**XCC1406PR05R**	0.355
		Push-pull	11…30 V	**XCC1406PR05K**	0.355
1000 points	Pre-cabled, radial L = 2 m	5 V, RS 422	4.5…5.5 V	**XCC1406PR10R**	0.355
		Push-pull	11…30 V	**XCC1406PR10K**	0.355
1024 points	Pre-cabled, radial L = 2 m	5 V, RS 422	4.5…5.5 V	**XCC1406PR11R**	0.355
		Push-pull	11…30 V	**XCC1406PR11K**	0.355

105161

XCC1406TR●●●

Through shaft, Ø 6 mm *(2)*

Resolution	Connection method	Output stage type *(1)*	Supply voltage	Reference	Weight kg
100 points	Pre-cabled, radial L = 2 m	5 V, RS 422	4.5…5.5 V	**XCC1406TR01R**	0.405
		Push-pull	11…30 V	**XCC1406TR01K**	0.405
360 points	Pre-cabled, radial L = 2 m	5 V, RS 422	4.5…5.5 V	**XCC1406TR03R**	0.405
		Push-pull	11…30 V	**XCC1406TR03K**	0.405
500 points	Pre-cabled, radial L = 2 m	5 V, RS 422	4.5…5.5 V	**XCC1406TR05R**	0.405
		Push-pull	11…30 V	**XCC1406TR05K**	0.405
1000 points	Pre-cabled, radial L = 2 m	5 V, RS 422	4.5…5.5 V	**XCC1406TR10R**	0.405
		Push-pull	11…30 V	**XCC1406TR10K**	0.405
1024 points	Pre-cabled, radial L = 2 m	5 V, RS 422	4.5…5.5 V	**XCC1406TR11R**	0.405
		Push-pull	11…30 V	**XCC1406TR11K**	0.405

(1) For characteristics of the output stage type (indicated by last letter of the reference), see page 8/7.
(2) Anti-rotation device included with encoder.

Incremental encoders

OsiSense XCC

Ø 58 mm encoders, aluminium and stainless steel versions

Environment

Encoder type			XCC1506P●●●●	XCC1510P●●●●	XCC1510S●●●●	XCC1514T●●●●
Conformity			CE			
Temperature	Operation (housing)	**°C**	- 30...+ 100 (except XCCTSM●●X and XCCTSM●●Y: - 30...+ 70)			
	Storage	**°C**	- 30…+ 85	- 30…+ 85	- 40…+ 100	- 30…+ 85
Degree of protection	Conforming to IEC 60529		IP 65	IP 65 (IP 67 with collar option XCCRB3)	IP 68 / IP 69K	IP 65
Vibration resistance	Conforming to IEC 60068-2-6		10 gn (f = 55…2000 Hz)			
Shock resistance	Conforming to IEC 60068-2-27		50 gn, duration 6 ms			
Resistance to electromagnetic interference	Electrostatic discharges		Conforming to IEC 61000-4-2: level 3, 8 kV air, 4 kV contact			
	Radiated electromagnetic fields (electromagnetic waves)		Conforming to IEC 61000-4-3: level 3, 10 V/m			
	Fast transients (Start/Stop interference)		Conforming to IEC 61000-4-4: level 3, 2 kV (1 kV for inputs/outputs)			
	Surge withstand		Conforming to IEC 61000-4-5: level 2, 1 kV			
Materials	Base		Aluminium		Stainless steel 316L	Aluminium
	Housing		Zamak		Stainless steel 316L	Zamak
	Shaft		Stainless steel 303		Stainless steel 316L	Stainless steel 303
	Ball bearings		6000			6803ZZ
	Shaft seal		–		Teflon ring	–

Mechanical characteristics

Shaft type			Ø 6, solid shaft (g7)	Ø 10 mm, solid shaft		Ø 14, through shaft (H7)
Maximum rotational speed	Continuous		9000 rpm	9000 rpm	3000 rpm	6000 rpm
Shaft moment of inertia		**g.cm²**	10	10	12	22
Torque		**N.cm**	0.4	0.4	9	0.6
Maximum load	Radial	**daN**	10	10	25	5
	Axial	**daN**	5	5	50	2

Electrical characteristics

Connection	Connector		M23, 12-pin male connector (2 m silicone cable for XCC1510S●●●)
Frequency		**kHz**	300
Number of channels			3 channels: A, B, top 0 and complements $\overline{A}$,$\overline{B}$, $\overline{0}$
Encoders with type X output stage: 5 V output driver, RS 422, 4.75…30 V supply			
Supply voltage			⎓ 4.75…30 V Maximum ripple: 500 mV
Current consumption, no-load		**mA**	75 maximum
Protection			Against short-circuits and reverse polarity
Output current		**mA**	40 maximum
Output levels	Low level		0.5 V maximum (Is = 20 mA)
	High level		4.5 V minimum (Is = 20 mA)
Encoders with type Y output stage: push-pull output driver, 5…30 V supply			
Supply voltage			⎓ 5…30 V Maximum ripple: 500 mV
Current consumption, no-load		**mA**	75 maximum
Protection			Against short-circuits and reverse polarity
Output current		**mA**	40 maximum
Output levels (for U supply = 30 V) *(1)*	Low level		0.5 V maximum (Is = 20 mA)
	High level		V supply - 2.5 V minimum (Is = 20 mA)

Schemes

Type X output stage

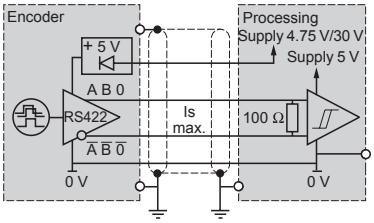

Type Y output stage

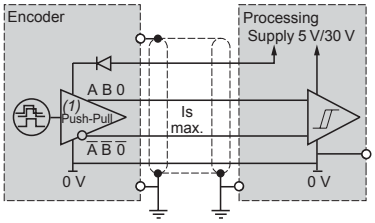

(1) RS 422 compatible on 5 V supply.

References: pages 8/13 to 8/15
Dimensions: pages 8/18 and 8/19
Connections: pages 8/20 and 8/21

Incremental encoders

OsiSense XCC

Ø 58 mm encoders, aluminium and stainless steel versions

105163

XCC1506PS●●●

Solid shaft, Ø 6 mm

Resolution	Connection method *(1)*	Output stage type *(2)*	Supply voltage	Reference	Weight kg
100 points	Connector, radial M23 male	5 V, RS 422	4.75…30 V	**XCC1506PS01X**	0.495
		Push-pull	5…30 V	**XCC1506PS01Y**	0.495
360 points	Connector, radial M23 male	5 V, RS 422	4.75…30 V	**XCC1506PS03X**	0.495
		Push-pull	5…30 V	**XCC1506PS03Y**	0.495
500 points	Connector, radial M23 male	5 V, RS 422	4.75…30 V	**XCC1506PS05X**	0.495
		Push-pull	5…30 V	**XCC1506PS05Y**	0.495
1000 points	Connector, radial M23 male	5 V, RS 422	4.75…30 V	**XCC1506PS10X**	0.495
		Push-pull	5…30 V	**XCC1506PS10Y**	0.495
1024 points	Connector, radial M23 male	5 V, RS 422	4.75…30 V	**XCC1506PS11X**	0.495
		Push-pull	5…30 V	**XCC1506PS11Y**	0.495
2500 points	Connector, radial M23 male	5 V, RS 422	4.75…30 V	**XCC1506PS25X**	0.495
		Push-pull	5…30 V	**XCC1506PS25Y**	0.495
5000 points	Connector, radial M23 male	5 V, RS 422	4.75…30 V	**XCC1506PS50X**	0.495
		Push-pull	5…30 V	**XCC1506PS50Y**	0.495

120311B

XCC1510SPA●●●

105164

XCC1510PS●●●

Solid shaft, Ø 10 mm

Resolution	Connection method *(1)*	Output stage type *(2)*	Supply voltage	Reference	Weight kg
100 points	Connector, radial M23 male	5 V, RS 422	4.75…30 V	**XCC1510PS01X**	0.465
		Push-pull	5…30 V	**XCC1510PS01Y**	0.465
360 points	Connector, radial M23 male	5 V, RS 422	4.75…30 V	**XCC1510PS03X**	0.465
		Push-pull	5…30 V	**XCC1510PS03Y**	0.465
	Cable (2 m)	Push-pull	5…30 V	**XCC1510SPA03Y** *(3)*	0.860
500 points	Connector, radial M23 male	5 V, RS 422	4.75…30 V	**XCC1510PS05X**	0.465
		Push-pull	5…30 V	**XCC1510PS05Y**	0.465
1000 points	Connector, radial M23 male	5 V, RS 422	4.75…30 V	**XCC1510PS10X**	0.465
		Push-pull	5…30 V	**XCC1510PS10Y**	0.465
1024 points	Connector, radial M23 male	5 V, RS 422	4.75…30 V	**XCC1510PS11X**	0.465
		Push-pull	5…30 V	**XCC1510PS11Y**	0.465
	Cable (2 m)	Push-pull	5…30 V	**XCC1510SPA11Y** *(3)*	0.860
2500 points	Connector, radial M23 male	5 V, RS 422	4.75…30 V	**XCC1510PS25X**	0.465
		Push-pull	5…30 V	**XCC1510PS25Y**	0.465
5000 points	Connector, radial M23 male	5 V, RS 422	4.75…30 V	**XCC1510PS50X**	0.465
		Push-pull	5…30 V	**XCC1510PS50Y**	0.465
	Cable (2 m)	Push-pull	5…30 V	**XCC1510SPA50Y** *(3)*	0.860

*(1) For female connector use **XZCC23FDP120S** or pre-wired connectors (L = 2, 5 or 10 m), see page 8/35.*
(2) For characteristics of the output stage type (indicated by last letter of the reference), see page 8/12.
(3) Stainless steel 316L version.

Incremental encoders

OsiSense XCC

Ø 58 mm encoders

105166

XCC1514TS●●●

Through shaft, Ø 14 mm (1)

Resolution	Connection method (2)	Output stage type (3)	Supply voltage	Reference	Weight kg
100 points	Connector, radial M23 male	5 V, RS 422	4.75…30 V	**XCC1514TS01X**	0.435
		Push-pull	5…30 V	**XCC1514TS01Y**	0.435
360 points	Connector, radial M23 male	5 V, RS 422	4.75…30 V	**XCC1514TS03X**	0.435
		Push-pull	5…30 V	**XCC1514TS03Y**	0.435
500 points	Connector, radial M23 male	5 V, RS 422	4.75…30 V	**XCC1514TS05X**	0.435
		Push-pull	5…30 V	**XCC1514TS05Y**	0.435
1000 points	Connector, radial M23 male	5 V, RS 422	4.75…30 V	**XCC1514TS10X**	0.435
		Push-pull	5…30 V	**XCC1514TS10Y**	0.435
1024 points	Connector, radial M23 male	5 V, RS 422	4.75…30 V	**XCC1514TS11X**	0.435
		Push-pull	5…30 V	**XCC1514TS11Y**	0.435
2500 points	Connector, radial M23 male	5 V, RS 422	4.75…30 V	**XCC1514TS25X**	0.435
		Push-pull	5…30 V	**XCC1514TS25Y**	0.435
5000 points	Connector, radial M23 male	5 V, RS 422	4.75…30 V	**XCC1514TS50X**	0.435
		Push-pull	5…30 V	**XCC1514TS50Y**	0.435

514218

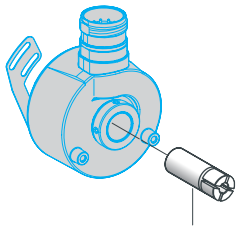

XCCR158RDA●●

Reduction collars for encoders with through shaft, Ø 14 mm

For use with	Diameter	Reference	Weight kg
Encoders with through shaft XCC1514TS●●●	Ø 6 mm	**XCCR158RDA06**	0.015
	Ø 8 mm	**XCCR158RDA08**	0.010
	Ø 10 mm	**XCCR158RDA10**	0.010
	Ø 12 mm	**XCCR158RDA12**	0.010

(1) Anti-rotation device included with encoder.
*(2) For female connector use **XZCC23FDP120S** or pre-wired connectors (L = 2, 5 or 10 m), see page 8/35.*
(3) For characteristics of the output stage type (indicated by last letter of the reference), see page 8/12.

8

Characteristics: page 8/12
Dimensions: pages 8/18 and 8/41
Connections: pages 8/20 and 8/21

Incremental encoders

OsiSense XCC

Ø 58 mm encoders

Parameterable versions (1)

105184

XCC1510PSM02X

Parameterable with solid shaft, Ø 10 mm

Resolution	Connection method (2)	Output stage type (3)	Supply voltage	Reference	Weight kg
256…4096 points	Connector, radial M23 male	5 V, RS 422	4.75…30 V	**XCC1510PSM02X**	0.465
		Push-pull	5…30 V	**XCC1510PSM02Y**	0.465
360…5760 points	Connector, radial M23 male	5 V, RS 422	4.75…30 V	**XCC1510PSM03X**	0.465
		Push-pull	5…30 V	**XCC1510PSM03Y**	0.465
500…8000 points	Connector, radial M23 male	5 V, RS 422	4.75…30 V	**XCC1510PSM05X**	0.465
		Push-pull	5…30 V	**XCC1510PSM05Y**	0.465
1024…16,384 points	Connector, radial M23 male	5 V, RS 422	4.75…30 V	**XCC1510PSM11X**	0.465
		Push-pull	5…30 V	**XCC1510PSM11Y**	0.465
5000…80,000 points	Connector, radial M23 male	5 V, RS 422	4.75…30 V	**XCC1510PSM50X**	0.465
		Push-pull	5…30 V	**XCC1510PSM50Y**	0.465

Parameterable with through shaft, Ø 14 mm (4)

Resolution	Connection method (2)	Output stage type (3)	Supply voltage	Reference	Weight kg
256…4096 points	Connector, radial M23 male	5 V, RS 422	4.75…30 V	**XCC1514TSM02X**	0.435
		Push-pull	5…30 V	**XCC1514TSM02Y**	0.435
360…5760 points	Connector, radial M23 male	5 V, RS 422	4.75…30 V	**XCC1514TSM03X**	0.435
		Push-pull	5…30 V	**XCC1514TSM03Y**	0.435
500…8000 points	Connector, radial M23 male	5 V, RS 422	4.75…30 V	**XCC1514TSM05X**	0.435
		Push-pull	5…30 V	**XCC1514TSM05Y**	0.435
1024…16,384 points	Connector, radial M23 male	5 V, RS 422	4.75…30 V	**XCC1514TSM11X**	0.435
		Push-pull	5…30 V	**XCC1514TSM11Y**	0.435
5000…80,000 points	Connector, radial M23 male	5 V, RS 422	4.75…30 V	**XCC1514TSM50X**	0.435
		Push-pull	5…30 V	**XCC1514TSM50Y**	0.435

Reduction collars for parameterable encoders with through shaft, Ø 14 mm

For use with	Diameter	Reference	Weight kg
Encoders with through shaft XCC1514TSM●●●	Ø 6	**XCCR158RDA06**	0.015
	Ø 8	**XCCR158RDA08**	0.010
	Ø 10	**XCCR158RDA10**	0.010
	Ø 12	**XCCR158RDA12**	0.010

514214

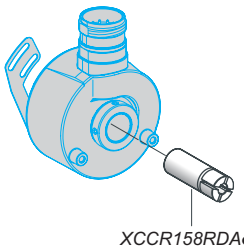

XCCR158RDA●●

(1) Parameter configuration: refer to table indicating position of dip switches on page 8/21.
*(2) For female connector use **XZCC23FDP120S** or pre-wired connectors (L = 2, 5 or 10 m), see page 8/35.*
(3) For characteristics of the output stage type (indicated by last letter of the reference), see page 8/12.
(4) Anti-rotation device included with encoder.

Incremental encoders

OsiSense XCC

Ø 90 mm encoders

Environment

Encoder type			XCC1912P●●●●	XCC1930T●●●●
Conformity			CE	
Temperature	Operation (housing)	**°C**	- 20…+ 80	
	Storage	**°C**	- 30…+ 85	
Degree of protection	Conforming to IEC 60529		IP 66	IP 65
Vibration resistance	Conforming to IEC 60068-2-6		10 gn (f = 10…1 kHz)	
Shock resistance	Conforming to IEC 60068-2-27		30 gn, duration 11 ms	
Resistance to electromagnetic interference	Electrostatic discharges		Conforming to IEC 61000-4-2: level 3, 8 kV air; 4 kV contact	
	Radiated electromagnetic fields (electromagnetic waves)		Conforming to IEC 61000-4-3: level 3, 10 V/m	
	Fast transients (Start/Stop interference)		Conforming to IEC 61000-4-4: level 3, 2 kV (1 kV for inputs/outputs)	
	Surge withstand		Conforming to IEC 61000-4-5: level 2, 1 kV	
Materials	Base		Aluminium	
	Housing		Zamak	
	Shaft		Stainless steel	
	Ball bearings		6001ZZ	6807

Mechanical characteristics

Shaft type			Ø 12, solid shaft (g6)	Ø 30, through shaft (H7)
Maximum rotational speed	Continuous		6000 rpm	3600 rpm
Shaft moment of inertia		**g.cm²**	150	500
Torque		**N.cm**	1	2.5
Maximum load	Radial	**daN**	20	8
	Axial	**daN**	10	5

Electrical characteristics

Encoders with type K (N) output stage: push-pull output driver, 11…30 V supply

Connection	Connector		M23, 12-pin male connector
Frequency		**kHz**	100
Number of channels			3 channels: A, B, top 0 and complements $\overline{A}$, $\overline{B}$, $\overline{0}$
Supply voltage			⎓ 11 V…30 V Maximum ripple: 500 mV
Current consumption, no-load		**mA**	75 maximum
Protection			Against short-circuits and reverse polarity
Output current		**mA**	40 maximum
Output levels	Low level		1.5 V maximum (Is = 20 mA)
	High level		V supply - 3 V minimum (Is = 20 mA)

Scheme
Type K (N) output stage

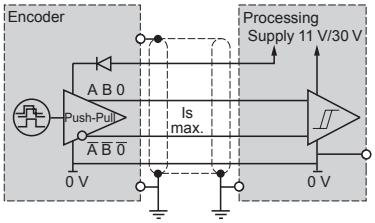

8

Characteristics: pages 8/7 and 8/12
References: pages 8/11, 8/13 to 8/15
Connections: pages 8/20 and 8/21

Incremental encoders

OsiSense XCC

Ø 90 mm encoders

105168

XCC1912PS●●KN

Solid shaft, Ø 12 mm

Resolution	Connection method *(1)*	Output stage type *(2)*	Supply voltage	Reference	Weight kg
360 points	Connector, radial M23 male	Push-pull	11…30 V	**XCC1912PS03KN**	1.360
500 points	Connector, radial M23 male	Push-pull	11…30 V	**XCC1912PS05KN**	1.360
1000 points	Connector, radial M23 male	Push-pull	11…30 V	**XCC1912PS10KN**	1.360
1024 points	Connector, radial M23 male	Push-pull	11…30 V	**XCC1912PS11KN**	1.360
2500 points	Connector, radial M23 male	Push-pull	11…30 V	**XCC1912PS25KN**	1.360
3600 points	Connector, radial M23 male	Push-pull	11…30 V	**XCC1912PS36KN**	1.360
5000 points	Connector, radial M23 male	Push-pull	11…30 V	**XCC1912PS50KN**	1.360
10,000 points	Connector, radial M23 male	Push-pull	11…30 V	**XCC1912PS00KN**	1.360

105171

XCC1930TS●●KN

Through shaft, Ø 30 mm *(3)*

Resolution	Connection method *(1)*	Output stage type *(2)*	Supply voltage	Reference	Weight kg
360 points	Connector, radial M23 male	Push-pull	11…30 V	**XCC1930TS03KN**	0.960
500 points	Connector, radial M23 male	Push-pull	11…30 V	**XCC1930TS05KN**	0.960
1000 points	Connector, radial M23 male	Push-pull	11…30 V	**XCC1930TS10KN**	0.960
1024 points	Connector, radial M23 male	Push-pull	11…30 V	**XCC1930TS11KN**	0.960
2500 points	Connector, radial M23 male	Push-pull	11…30 V	**XCC1930TS25KN**	0.960
3600 points	Connector, radial M23 male	Push-pull	11…30 V	**XCC1930TS36KN**	0.960
5000 points	Connector, radial M23 male	Push-pull	11…30 V	**XCC1930TS50KN**	0.960

523200

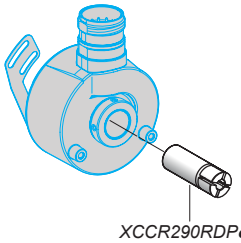

XCCR290RDP●●

Reduction collars for encoders with hrough shaft, Ø 30 mm

For use with	Diameter	Reference	Weight kg
Encoders with through shaft XCC1930TS●●●●N	Ø 12 mm	**XCCR290RDP12**	0.060
	Ø 16 mm	**XCCR290RDP16**	0.060
	Ø 20 mm	**XCCR290RDP20**	0.030
	Ø 25 mm	**XCCR290RDP25**	0.025

*(1) For female connector use **XZCC23FDP120S** or pre-wired connectors (L = 2, 5 or 10 m), see page 8/35.*
(2) For characteristics of the output stage type (indicated by last letter of the reference), see page 8/16.
(3) Anti-rotation device included with encoder.

Incremental encoders

OsiSense XCC

Ø 40 mm and Ø 58 mm encoders

Ø 40 mm encoders

XCC1406PR●●●N

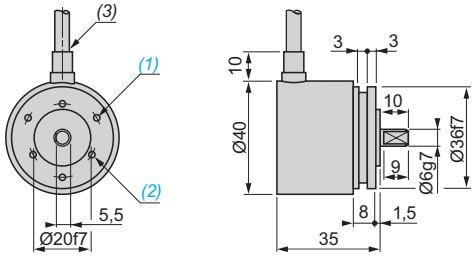

(1) 3 holes M3 x 0.5 at 120° on 28 PCD, depth: 5 mm.
(2) 3 holes M3 x 0.5 at 120° on 24 PCD, depth: 5 mm.
(3) Ø 6 cable, length 2 m, minimum bend radius: 30 mm.

XCC1406TR●●●N

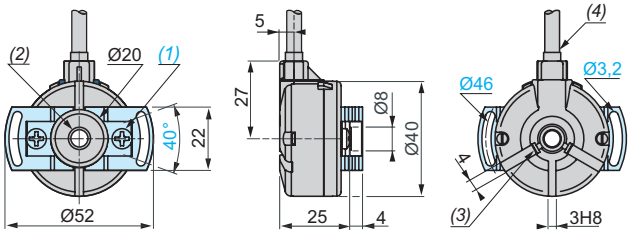

(1) 2 M4 holes at 120° for cross-headed screws on 30 PCD, depth: 6 mm.
(2) Through shaft, Ø 6 (H7).
(3) 2 M2 x 3 flat cross-headed locking screws.
(4) Ø 6 cable, length 2 m, minimum bend radius: 30 mm.

Ø 58 mm encoders

XCC1506PS●●X, XCC1506PS●●Y

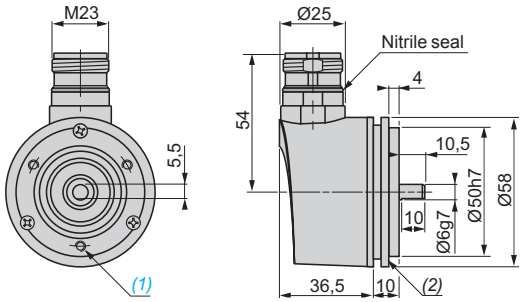

(1) 3 holes M3 x 4 at 120° on 42 PCD, depth: 10 mm.
(2) Collar XCCRB1 mounted.

XCC1510PS●●X, 1510PS●●Y / XCC1510PSM●●X, 1510PSM●●Y

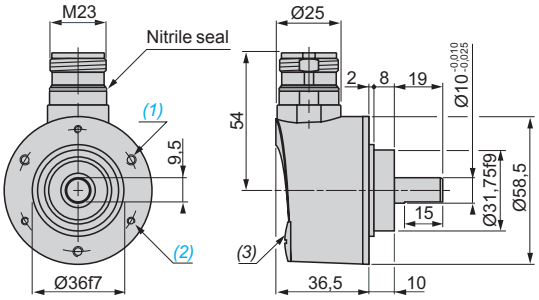

(1) 3 M4 holes at 120° on 48 PCD, depth: 8 mm.
(2) 3 M3 holes at 120° on 48 PCD, depth: 8 mm.
(3) Blanking plug, for encoders XCC1510PSM●●X and 1510PSM●●Y only.

XCC1514TS●●X, 1514TS●●Y / XCC1514TSM●●X, 1514TSM●●Y

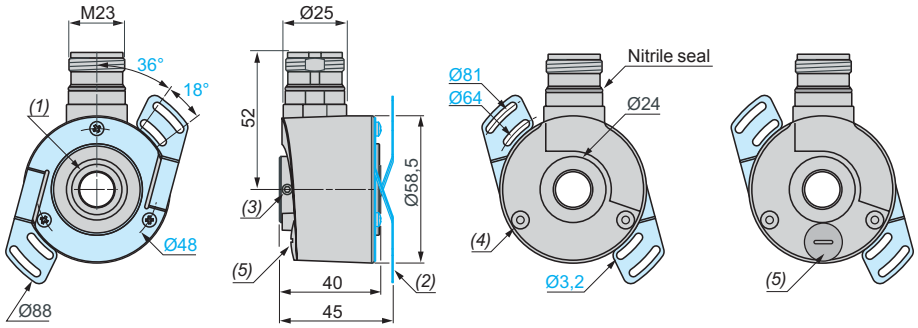

(1) Through shaft, Ø 14 (H7).
(2) Flexible mounting kit, 1 x XCCRF5N mounted.
(3) 2 HC M4 x 4 locking screws.
(4) Hole for M3 x 6 self-threading screw.
(5) Blanking plug, for encoders XCC1514TSM●●X and 1514TSM●●Y only.

Characteristics: pages 8/7 and 8/12
References: pages 8/11, 8/13 to 8/15
Connections: pages 8/20 and 8/21

Ø 58 mm encoders (continued)

XCC1510SPA●●Y

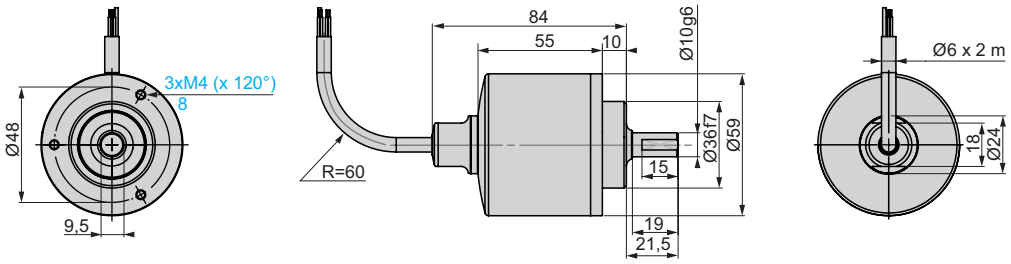

R: minimum bend radius = 60 mm.

Ø 90 mm encoders

XCC1912PS●●●N

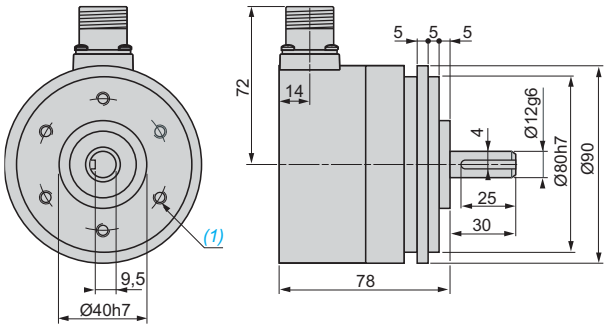

(1) 6 holes M6 x 1 at 120° on 60 PCD, maximum depth: 12 mm.

XCC1930TS●●●N

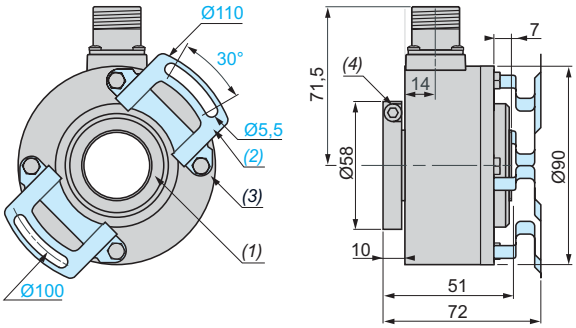

(1) Through shaft, Ø 30 (H7).
(2) Anti-rotation device, 1 x XCCRF9, mounted.
(3) 4 M5 x 6 on 78 PCD.
(4) 1 CHC M5 x 12 stainless steel A2 locking screw.

Incremental encoders

OsiSense XCC

Ø 40 mm, Ø 58 mm and Ø 90 mm encoders

Pre-cabled version encoders *(1)*

8 x 0.14 mm² shielded cable connections for Ø 58 encoders stainless steel version

Wire colour	PK	BN	GY	RD	YE	BU	GN	WH
Signal Supply	$\overline{A}$	+ V	0	$\overline{0}$	B	$\overline{B}$	A	0 V

PK = Pink
BN = Brown
GY = Grey
RD = Red
YE = Yellow
BU = Blue
GN = Green
WH = White

8 x 0.14 mm² shielded cable connections for Ø 40 encoders

Wire colour	BN	RD	VT	BU	YE	OG	GN	BK
Signal Supply	A	+ V	0	$\overline{0}$	B	$\overline{B}$	A	0 V

BN = Brown
RD = Red
VT = Violet
BU = Blue
YE = Yellow
OG = Orange
GN = Green
BK = Black

Note: *In environments subject to electrical interference, it is recommended to earth the encoder base using one of the fixing screws.*

Connector version encoders *(1)*

M23, 12-pin connector connections

Male connector on encoder (pin view)

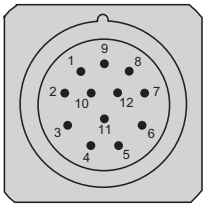

Pin number	1	2	3	4	5	6	7	8	9	10	11	12
Signal Supply	A	+ V	0	0	B	B	R	A	R	0 V	0 V	+ V

Note: *In environments subject to electrical interference, it is recommended to earth the encoder base using one of the fixing screws.*
R = reserved, do not connect.

(1) Connect each unused channel to 0 V in series with a 10 kΩ resistor.

Resolutions

Resolutions for parameterable Ø 58 mm encoders XCC1510PSM●●● and XCC1514TSM●●●

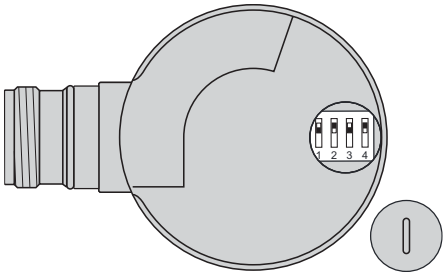

Simple multiplication of the basic resolution of the disc using dip switches *(1)* (Plastic Ø 2.5 screwdriver recommended).

The factory setting is for factor X1.

Interpolation factor		Basic resolution					Position of dip switches			
Counting	Speed	**256**	**360**	**500**	**1024**	**5000**	**1**	**2**	**3**	**4**
x 1	**x 1**	256	360	500	1024	5000	▭ ▬	▬ ▭	▭ ▬	▬ ▭
x 2	**x 2**	512	720	1000	2048	10,000	▬ ▭	▬ ▭	▭ ▬	▬ ▭
x 3	**x 3**	768	1080	1500	3072	15,000	▬ ▭	▭ ▬	▭ ▬	▬ ▭
x 4	**x 4**	1024	1440	2000	4096	20,000	▭ ▬	▬ ▭	▬ ▭	▬ ▭
x 5	**–**	1280	1800	2500	5120	25,000	▬ ▭	▬ ▭	▬ ▭	▬ ▭
x 8	**–**	2048	2880	4000	8192	40,000	▬ ▭	▭ ▬	▬ ▭	▬ ▭
x 10	**–**	2560	3600	5000	10,240	50,000	▭ ▬	▬ ▭	▬ ▭	▭ ▬
x 12	**–**	3072	4320	6000	12,288	60,000	▬ ▭	▬ ▭	▬ ▭	▭ ▬
x 16	**–**	4096	5760	8000	16,384	80,000	▬ ▭	▭ ▬	▬ ▭	▭ ▬

(1) Setting the switches to other configurations will result in the encoder providing an unpredictable resolution.

Single turn absolute encoders

OsiSense XCC

Ø 58 mm encoders, aluminium and stainless steel versions

Environment

Encoder type			XCC2506P●●●●●	XCC2510P●●●●●	XCC2510S●●●●●	XCC2514T●●●●●
Conformity			CE			
Temperature	Operation (housing)	**°C**	- 20…+ 90	- 20…+ 90	- 20…+ 90	- 20…+ 90
	Storage	**°C**	- 30…+ 95	- 30…+ 95	- 40…+ 100	- 30…+ 95
Degree of protection	Conforming to IEC 60529		IP 65	IP 65 (IP 67 with collar option XCCRB3)	IP 68 / IP 69K	IP 65
Vibration resistance	Conforming to IEC 60068-2-6		10 gn (f = 55…2 kHz)			
Shock resistance	Conforming to IEC 60068-2-27		30 gn, duration 11 ms			
Resistance to electromagnetic interference	Electrostatic discharges		Conforming to IEC 61000-4-2: level 3, 8 kV air; 4 kV contact			
	Radiated electromagnetic fields (electromagnetic waves)		Conforming to IEC 61000-4-3: level 3, 10 V/m			
	Fast transients (Start/Stop interference)		Conforming to IEC 61000-4-4: level 3, 2 kV (1 kV for inputs/outputs)			
	Surge withstand		Conforming to IEC 61000-4-5: level 2, 1 kV			
Materials	Base		Aluminium		Stainless steel 316L	Aluminium
	Housing		Zamak		Stainless steel 316L	Zamak
	Shaft		Stainless steel 303		Stainless steel 316L	Stainless steel 303
	Ball bearings		6000			6803ZZ
	Shaft seal		–		Teflon ring	–

Mechanical characteristics

Shaft type			Ø 6, solid shaft (g7)	Ø 10 mm, solid shaft	Ø 10 mm, solid shaft	Ø 14, through shaft (H7)
Maximum rotational speed	Continuous		9000 rpm	9000 rpm	3000 rpm	6000 rpm
Shaft moment of inertia		**g.cm²**	10	10	12	22
Torque		**N.cm**	0.4	0.4	9	0.6
Maximum load	Radial	**daN**	10	10	25	5
	Axial	**daN**	5	5	50	2

Electrical characteristics

Connection	Connector		**Encoders with parallel output stage types KG (N), KB:** M23, 16-pin male connector (2 m TPU cable for XCC2510S●●●). **Encoders with SSI output stage types SB (N), SG (N):** M23, 12-pin male connector. (2 m PUR cable for XCC2510S●●●).
Frequency		**kHz**	**Encoders with parallel output stage types KG (N), KB:** 100 kHz on LSB (Least Significant Bit) **Encoders with SSI output stage types SB (N), SG (N):** 100 kHz to 1 MHz clock
Encoders with type KB and KG (N) output stage: push-pull output driver, Gray code			
Supply voltage			⎓ 11…30 V Maximum ripple: 500 mV. (For XCC2510SPA81●●●: 5…30 V. Maximum ripple 200 mV, if supply voltage < 6 V; 500 mV, if supply voltage ⩾ 6V).
Current consumption, no-load		**mA**	100 maximum
Protection			Against short-circuits and reverse polarity
Output current		**mA**	20 maximum
Output levels (for U supply = 30 V)	Low level		0.5 V maximum (Is = 20 mA)
	High level		V supply - 2.5 V minimum (Is = 20 mA)

Schemes

Type KB and KG (N) output stage

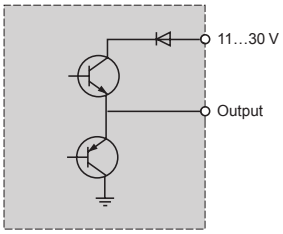

KB and KG (N) DIRECTION input

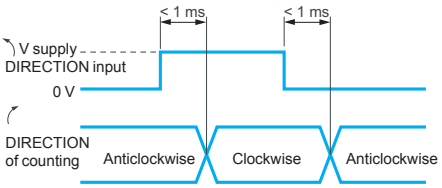

References: page 8/23
Dimensions: page 8/26
Connections: page 8/27

Electrical characteristics *(continued)*

Encoders with type SB (N) or SG (N) output stage: SSI output without parity, 13-bit clock, 11…30 V supply, binary code (SB) or Gray code (SG)		
Supply voltage		⎓ 11…30 V. Maximum ripple: 500 mV
Current consumption, no-load	**mA**	100
Protection		Against short-circuits and reverse polarity
Output level		Idata = 20 mA |VOD| > 2 V

Schemes

RS 422 data output

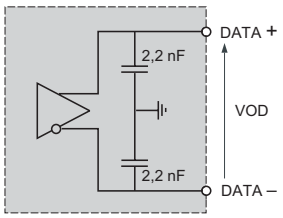

Idata = 20 mA |VOD| > 2 V

Isolated clock input

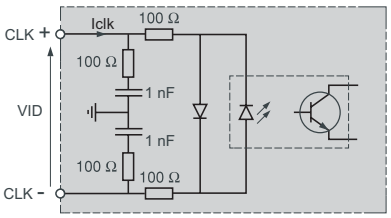

|VID| maximum: 5 V
|Iclk| maximum: 15 mA

DIRECTION input

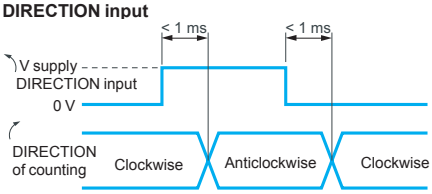

References

105173

XCC2506PS81●●●

12031 1B

XCC2510SPA81●GN

514214

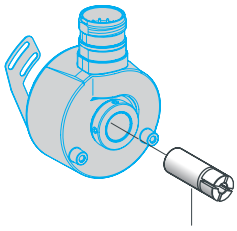

XCCR158RDA●●

Resolution	Connection method *(1)*	Output stage type *(2)*	Supply voltage	Reference	Weight kg
Solid shaft, Ø 6 mm					
8192 points	Connector, radial M23 male	Push-pull, 13-bit, binary	11…30 V	**XCC2506PS81KB**	0.495
		Push-pull, 13-bit, Gray	11…30 V	**XCC2506PS81KGN**	0.495
		SSI, 13-bit, binary	11…30 V	**XCC2506PS81SBN**	0.490
		SSI, 13-bit, Gray	11…30 V	**XCC2506PS81SGN**	0.490
Solid shaft, Ø 10 mm					
8192 points	Connector, radial M23 male	Push-pull, 13-bit, binary	11…30 V	**XCC2510PS81KB**	0.465
		Push-pull, 13-bit, Gray	11…30 V	**XCC2510PS81KGN**	0.465
		SSI, 13-bit, binary	11…30 V	**XCC2510PS81SBN**	0.460
		SSI, 13-bit, Gray	11…30 V	**XCC2510PS81SGN**	0.460
	Cable (2 m)	Push-pull, Gray	5…30 V	**XCC2510SPA81KGN** *(4)*	0.915
		SSI, 13-bit, Gray	5…30 V	**XCC2510SPA81SGN** *(4)*	0.925
Through shaft, Ø 14 mm *(3)*					
8192 points	Connector, radial M23 male	Push-pull, 13-bit, binary	11…30 V	**XCC2514TS81KB**	0.435
		Push-pull, 13-bit, Gray	11…30 V	**XCC2514TS81KG**	0.435
		SSI, 13-bit, binary	11…30 V	**XCC2514TS81SB**	0.430
		SSI, 13-bit, Gray	11…30 V	**XCC2514TS81SG**	0.430

Reduction collars for encoders with through shaft, Ø 14 mm

For use with	Diameter	Reference	Weight kg
Encoders with through shaft XCC2514TS81●●	Ø 6 mm	**XCCR158RDA06**	0.015
	Ø 8 mm	**XCCR158RDA08**	0.010
	Ø 10 mm	**XCCR158RDA10**	0.010
	Ø 12 mm	**XCCR158RDA12**	0.010

(1) For female connector use:
*- **XZCC23FDP120S** for encoders type SBN and SGN*
*- **XZCC23FDP160S** for encoders type KB and KGN,*
or pre-wired connectors (L = 2, 5 and 10 m), see page 8/35.
(2) For characteristics of the output stage type (indicated by last letter of the reference), see page 8/22.
(3) Anti-rotation device included with encoder.
(4) Stainless steel 316L version.

Single turn absolute encoders

OsiSense XCC

Ø 90 mm encoders

Environment

Encoder type			XCC2912P●●●●●	XCC2930T●●●●●
Conformity			CE	
Temperature	Operation (housing)	**°C**	- 20…+ 85	
	Storage	**°C**	- 40…+ 85	
Degree of protection	Conforming to IEC 60529		IP 66	IP 65
Vibration resistance	Conforming to IEC 60068-2-6		10 gn (f = 10…2 kHz)	
Shock resistance	Conforming to IEC 60068-2-27		30 gn, duration 11 ms	
Resistance to electromagnetic interference	Electrostatic discharges		Conforming to IEC 61000-4-2: level 3, 8 kV air; 4 kV contact	
	Radiated electromagnetic fields (electromagnetic waves)		Conforming to IEC 61000-4-3: level 3, 10 V/m	
	Fast transients (Start/Stop interference)		Conforming to IEC 61000-4-4: level 3, 2 kV (1 kV for inputs/outputs)	
	Surge withstand		Conforming to IEC 61000-4-5: level 2, 1 kV	
Materials	Base		Aluminium	
	Housing		Zamak	
	Shaft		Stainless steel	
	Ball bearings		6001ZZ	6807

Mechanical characteristics

Shaft type			Ø 12, solid shaft (g6)	Ø 30, through shaft (H7)
Maximum rotational speed	Continuous		6000 rpm	3600 rpm
Shaft moment of inertia		**g.cm²**	150	500
Torque		**N.cm**	1	2.5
Maximum load	Radial	**daN**	20	8
	Axial	**daN**	10	5

Electrical characteristics

Connection	Connector		**Encoders with parallel output stage types KB (N), KG (N):** M23, 16-pin male connector. **Encoders with SSI output stage types SB (N), SG (N):** M23, 12-pin male connector
Frequency			**Encoders with parallel output stage types KB (N), KG (N):** 100 kHz on LSB (Least Significant Bit) **Encoders with SSI output stage types SB (N), SG (N):** 100 kHz to 1 MHz clock
Encoders with type KB (N) or KG (N) output stage: push-pull output driver, 11…30 V supply, binary code KB (N) or Gray code KG (N)			
Supply voltage			⎓ 11…30 V. Maximum ripple: 500 mV (For XCC2510S●●●: 5…30 V. Maximum ripple 200 mV, if supply voltage < 6 V; 500 mV, if supply voltage ≥ 6V).
Current consumption, no-load		**mA**	100 maximum
Protection			Against short-circuits and reverse polarity
Output current		**mA**	20 maximum
Output levels (for U supply = 30 V)	Low level		0.5 V maximum (Is = 20 mA)
	High level		V supply - 3 V minimum (Is = 20 mA)

Schemes

Type KB (N) and KG (N) output stage

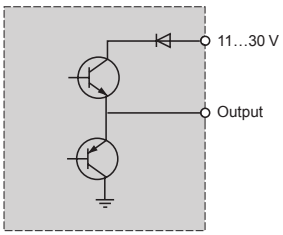

KB (N) and KG (N) DIRECTION input

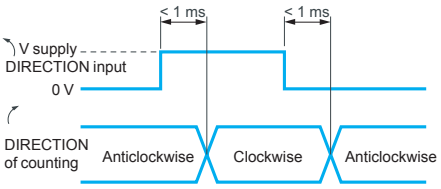

References: page 8/25
Dimensions: page 8/26
Connections: page 8/27

Electrical characteristics (continued)

Encoders with type SB (N) or SG (N) output stage: SSI output without parity, 13-bit clock, 11…30 V supply, binary code SB (N) or Gray code SG (N)

Supply voltage		⎓ 11…30 V Maximum ripple: 500 mV
Current consumption, no-load	**mA**	100
Protection		Against short-circuits and reverse polarity
Output level		Idata = 20 mA |VOD| > 2 V

Schemes

RS 422 data output

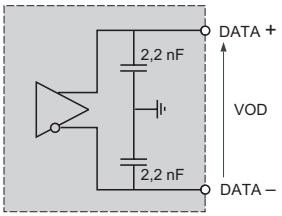

Idata = 20 mA |VOD| > 2 V

Isolated clock input

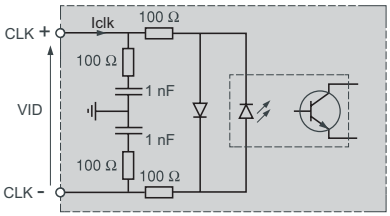

|VID| maximum: 5 V
|Iclk| maximum: 15 mA

DIRECTION input

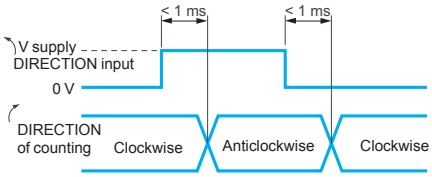

References

105168

XCC2912PS●●●●

105171

XCC2930TS●●●●

5232001

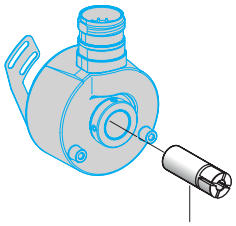

XCCR290RDP●●

Resolution	Connection method *(1)*	Output stage type *(2)*	Supply voltage	Reference	Weight kg
Solid shaft, Ø 12 mm					
8192 points	Connector, radial M23 male	Push-pull, 13-bit, binary	11…30 V	**XCC2912PS81KBN**	1.365
		Push-pull, 13-bit, Gray	11…30 V	**XCC2912PS81KGN**	1.365
		SSI, 13-bit, Gray	11…30 V	**XCC2912PS81SGN**	1.370
Through shaft, Ø 30 mm *(3)*					
8192 points	Connector, radial M23 male	Push-pull, 13-bit, binary	11…30 V	**XCC2930TS81KBN**	0.975
		Push-pull, 13-bit, Gray	11…30 V	**XCC2930TS81KGN**	0.975
		SSI, 13-bit, binary	11…30 V	**XCC2930TS81SBN**	0.980
		SSI, 13-bit, Gray	11…30 V	**XCC2930TS81SGN**	0.980

Reduction collars for encoders with through shaft, Ø 30 mm

For use with	Diameter	Reference	Weight kg
Encoders with through shaft XCC2930TS81●●●	Ø 12 mm	**XCCR290RDP12**	0.060
	Ø 16 mm	**XCCR290RDP16**	0.060
	Ø 20 mm	**XCCR290RDP20**	0.030
	Ø 25 mm	**XCCR290RDP25**	0.020

(1) For female connector use:
*- **XZCC23FDP120S** for encoders type SB (N) and SG (N)*
*- **XZCC23FDP160S** for encoders type KB (N) and KG (N),*
or pre-wired connectors (L = 2, 5 and 10 m), see page 8/35.
(2) For characteristics of the output stage type (indicated by last letter of the reference), see page 8/24.
(3) Anti-rotation device included with encoder.

Single turn absolute encoders

OsiSense XCC

Ø 58 mm and Ø 90 mm encoders

Ø 58 mm encoders

XCC2506PS81KB, XCC2506PS81KGN, XCC2506PS81SBN, XCC2506PS81SGN

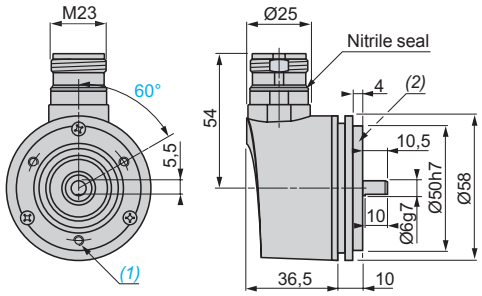

(1) 3 M4 holes at 120° on 42 PCD, depth: 10 mm.
(2) Collar XCCRB1 mounted.

XCC2510PS81KB, XCC2510PS81KGN, XCC2510PS81SBN, XCC2510PS81SGN

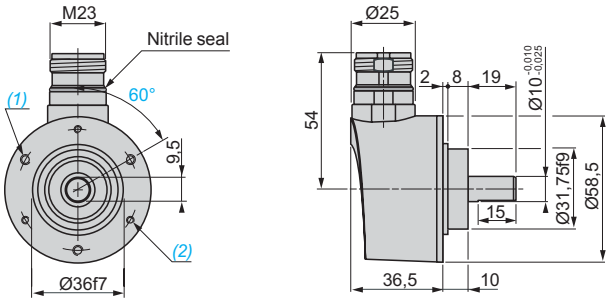

(1) 3 M4 holes at 120° on 48 PCD, depth: 8 mm.
(2) 3 M3 holes at 120° on 48 PCD, depth: 8 mm.

XCC2514TS81KB, XCC2514TS81KGN, XCC2514TS81SB, XCC2514TS81SG

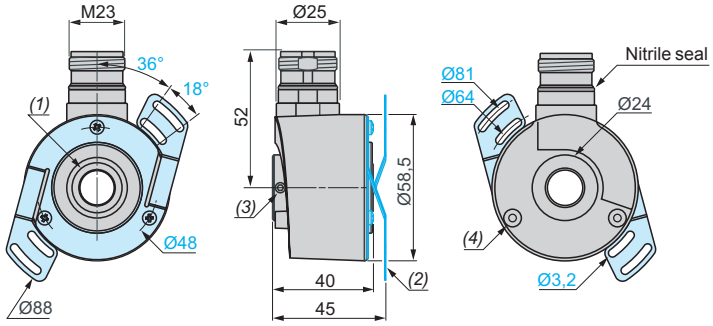

(1) Through shaft, Ø 14 (H7).
(2) Flexible mounting kit, 1 x XCCRF5N mounted.
(3) 2 HC M4 x 4 locking screws.
(4) Hole for M3 x 6 self-threading screw.

XCC2510SPA81KGN, XCC2510SPA81SGN

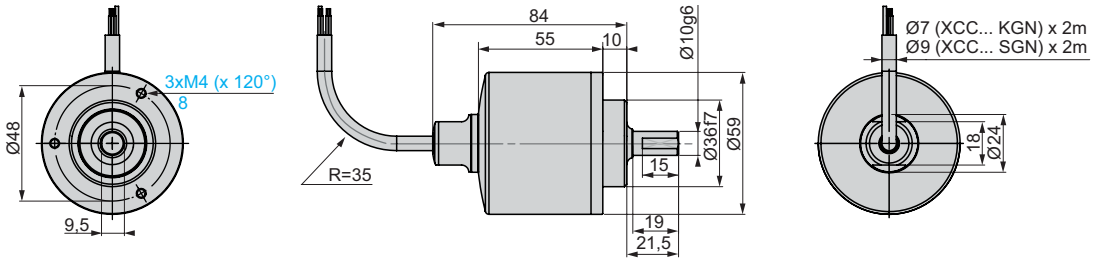

R: minimum bend radius = 35 mm for XCC2510SPA81KGN, 65 mm for XCC2510SPA81SGN.

Ø 90 mm encoders

XCC2912PS81KBN, XCC2912PS81KGN

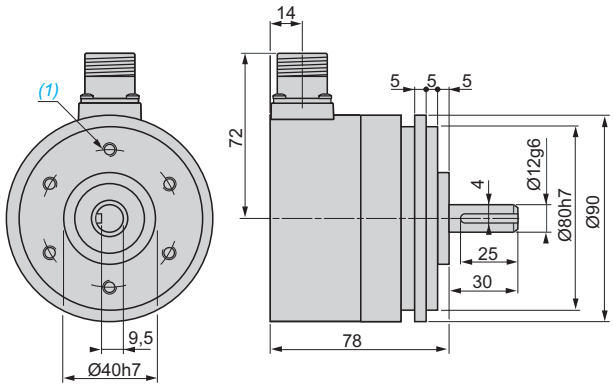

(1) 6 holes M6 x 1 at 120° on 60 PCD, depth: 12 mm maximum.

XCC2930TS81SBN, XCC2930TS81SGN

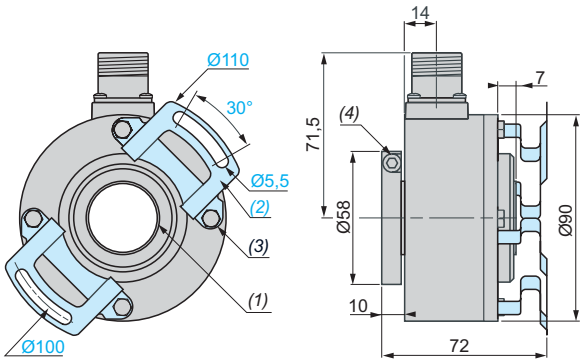

(1) Through shaft, Ø 30 (H7).
(2) Anti-rotation device, 1 x XCCRF9, mounted.
(3) 4 M5 x 6 on 78 PCD.
(4) 1 CHC M5 x 12 stainless steel A2 locking screw.

Characteristics:
pages 8/22 and 8/24

References:
pages 8/23 and 8/25

Single turn absolute encoders

OsiSense XCC

Ø 58 mm and Ø 90 mm encoders

Connector version encoders

Encoders type KB (N) and KG (N)
M23, 16-pin connector, anticlockwise connections

Male connector on encoder (pin view)

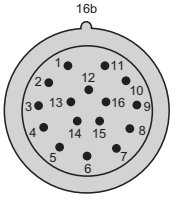

Pin number	1	2	3	4	5	6	7	8	9	10	11	12	13	14	15	16
Signal/Supply If a resolution less than 13 bits (8192 points) is required, only the corresponding number of bits need to be connected: Example: - D5 to D12 for 8 bits (256 points) - D3 to D12 for 10 bits (1024 points) - D2 to D12 for 11 bits (2048 points)	0 V	+ V	d0	d1	d2	d3	d4	d5	d6	d7	d8	d9	d10	d11	d12	Direction (1)

(1) ↻ : Clockwise direction, 16 to + V.
↺ : Anticlockwise direction, 16 to 0 V.

Encoders type SB (N) and SG (N)
M23, 12-pin connector, anticlockwise connections

Male connector on encoder (pin view)

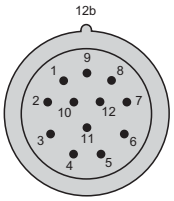

Pin number	1	2	3	4	5	6	7	8	9	10	11	12
Signal/Supply	0 V	Data +	Clk +	R	Direction (2)	R	R	+ V	R	Data –	Clk –	R

R = Reserved (do not connect).

(2) ↻ : Clockwise direction, 5 to 0 V.
↺ : Anticlockwise direction, 5 to + V.

Cable version encoders

XCC2510SPA81KGN

Wire colour	WH White	BN Brown	GN Green	YE Yellow	GY Grey	OG Orange	BU Blue	RD Red
Signal/Supply	0 V	+ V	d0	d1	d2	d3	d4	d5

BK Black	VT Violet	WH/BN White/ brown	WH/GN White/ green	WH/YE White/ yellow	WH/BK White/ black	WH/OG White/ orange	WH/RD White/ red
d6	d7	d8	d9	d10	d11	d12	Direction (3)

(3) ↻ : Clockwise direction, to + V.
↺ : Anticlockwise direction, to 0 V.

XCC2510SPA81SGN

Wire colour	BK Black	BN Brown	GN Green	VT Violet	BU Blue	RD Red	OG Orange	YE Yellow
Signal/Supply	0 V	Data +	Clock +	Direction (4)	Reset to zero	+ V	Data -	Clock -

(4) ↻ : Clockwise direction, to 0 V.
↺ : Anticlockwise direction, to + V.

Multiturn absolute encoders

OsiSense XCC

Ø 58 mm encoders, aluminium and stainless steel versions

Environment

Encoder type	Multiturn absolute		XCC3506P●●●●●	XCC3510P●●●●●	XCC3510SPA48●●●	XCC3514T●●●●●
Conformity			CE			
Temperature	Operation (housing)	**°C**	- 20…+ 85			
	Storage	**°C**	- 20…+ 85			
Degree of protection	Conforming to IEC 60529		IP 65	IP 65 (IP 67 with collar option XCCRB3)	IP 68 / IP 69K	IP 65
Vibration resistance	Conforming to IEC 60068-2-6		10 gn (f = 10…2 kHz)			
Shock resistance	Conforming to IEC 60068-2-27		30 gn, duration 11 ms			
Resistance to electromagnetic interference	Electrostatic discharges		Conforming to IEC 61000-4-2: level 3, 8 kV air; 4 kV contact			
	Radiated electromagnetic fields (electromagnetic waves)		Conforming to IEC 61000-4-3: level 3, 10 V/m			
	Fast transients (Start/Stop interference)		Conforming to IEC 61000-4-4: level 3, 2 kV (1 kV for inputs/outputs)			
	Surge withstand		Conforming to IEC 61000-4-5: level 2, 1 kV			
Materials	Base		Aluminium		Stainless steel 316L	Aluminium
	Housing		Steel		Stainless steel 316L	Steel
	Shaft		Stainless steel 303		Stainless steel 316L	Stainless steel 303
	Ball bearings		6000		6000	6803ZZ
	Shaft seal		–		Teflon ring	–

Mechanical characteristics

Shaft type			Ø 6, solid shaft (g7)	Ø 10 mm, solid shaft		Ø 14, through shaft (H7)
Maximum rotational speed	Continuous		6000 rpm		3000 rpm	6000 rpm
Shaft moment of inertia		**g.cm²**	10		12	22
Torque		**N.cm**	0.4		9	0.6
Maximum load	Radial	**daN**	10		25	5
	Axial	**daN**	5		25	2

Electrical characteristics

Connection	Connector		**Encoders with SSI output stage types SB (N), SG (N):** M23, 12-pin male connector, (2 m PUR cable for XCC3510SPA48●●●).
Frequency			**Encoders with SSI output stage types SB (N), SG (N):** 100 to 500 kHz clock
Supply voltage			⎓ 11…30 V. Maximum ripple: 500 mV (For XCC3510SPA48●●●: 5…30 V. Maximum ripple 200 mV, if supply voltage < 6 V; 500 mV, if supply voltage ⩾ 6V).
Current consumption, no-load		**mA**	100 maximum
Protection			Against short-circuits and reverse polarity
Output level			Idata = 20 mA |VOD| > 2 V

Schemes

RS 422 data output

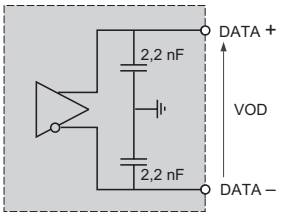

Idata = 20 mA |VOD| > 2 V

Isolated clock input

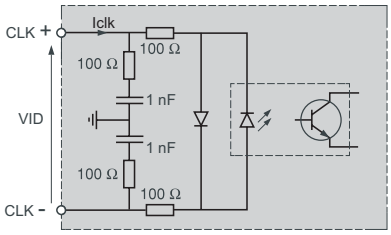

|VID| maximum: 5 V
|Iclk| maximum: 15 mA

DIRECTION input

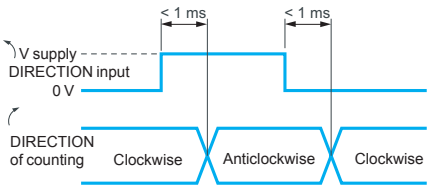

Input stage - Reset to zero

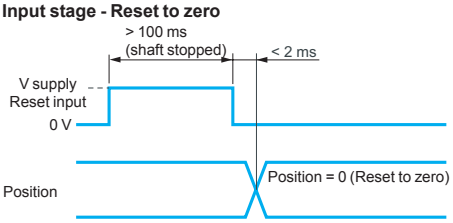

References: page 8/29
Dimensions: page 8/32
Connections: page 8/33

Multiturn absolute encoders

OsiSense XCC

Ø 58 mm encoders, aluminium and stainless steel versions

105174

XCC3506PS84SBN

120311B

XCC3510SPA48SGN

514215

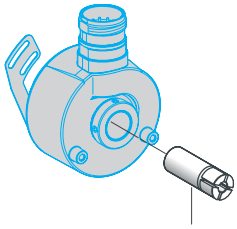

XCCR158RDA●●

Ø 58 mm multiturn absolute encoders with SSI output convertible to parallel output

The SSI versions can be converted to a parallel version using the deserialisation connecting cable XCCRM23SUB37●●, see pages 8/34 and 8/35.

Solid shaft, Ø 6 mm

Resolution	Connection method *(1)*	Output stage type *(2)*	Supply voltage	Reference	Weight kg
4096 points 8192 turns	Connector, radial M23 male	SSI, 25-bit, binary	11…30 V	**XCC3506PS48SBN**	0.725
8192 points 4096 turns	Connector, radial M23 male	SSI, 25-bit, binary	11…30 V	**XCC3506PS84SBN**	0.725
		SSI, 25-bit, Gray	11…30 V	**XCC3506PS84SGN**	0.725

Solid shaft, Ø 10 mm

Resolution	Connection method *(1)*	Output stage type *(2)*	Supply voltage	Reference	Weight kg
4096 points 8192 turns	Connector, radial M23 male	SSI, 25-bit, binary	11…30 V	**XCC3510PS48SBN**	0.685
	Cable (2 m)	SSI, 25-bit, binary	5…30 V	**XCC3510SPA48SGN** *(3)*	0.935
8192 points 4096 turns	Connector, radial M23 male	SSI, 25-bit, binary	11…30 V	**XCC3510PS84SBN**	0.685
		SSI, 25-bit, Gray	11…30 V	**XCC3510PS84SGN**	0.685

Through shaft, Ø 14 mm *(4)*

Resolution	Connection method *(1)*	Output stage type *(2)*	Supply voltage	Reference	Weight kg
8192 points 4096 turns	Connector, radial M23 male	SSI, 25-bit, binary	11…30 V	**XCC3514TS84SB**	0.655

Reduction collars for encoders with through shaft, Ø 14 mm

For use with	Diameter	Reference	Weight kg
Encoders with through shaft XCC3514TS84●●	Ø 6 mm	**XCCR158RDA06**	0.015
	Ø 8 mm	**XCCR158RDA08**	0.010
	Ø 10 mm	**XCCR158RDA10**	0.010
	Ø 12 mm	**XCCR158RDA12**	0.010
	0.375”	**XCCR158RDAU37**	0.011
	0.5”	**XCCR158RDAU50**	0.007

*(1) For female connector use **XZCC23FDP120S** or pre-wired connectors (L = 2, 5 or 10 m), see page 8/35.*
(2) For characteristics of the output stage type (indicated by last letter of the reference), see page 8/28.
(3) Stainless steel 316L version.
(4) Anti-rotation device included with encoder.

Multiturn absolute encoders

OsiSense XCC

Ø 90 mm encoders

Environment

Encoder type			XCC3912P●●●●●	XCC3930T●●●●●
Conformity			CE	
Temperature	Operation (housing)	**°C**	- 20…+ 85	- 10…+ 75
	Storage	**°C**	- 30…+ 85	- 20…+ 85
Degree of protection	Conforming to IEC 60529		IP 66	IP 65
Vibration resistance	Conforming to IEC 60068-2-6		10 gn (f = 10…2 kHz)	
Shock resistance	Conforming to IEC 60068-2-27		30 gn, duration 11 ms	
Resistance to electromagnetic interference	Electrostatic discharges		Conforming to IEC 61000-4-2: level 3, 8 kV air; 4 kV contact	
	Radiated electromagnetic fields (electromagnetic waves)		Conforming to IEC 61000-4-3: level 3, 10 V/m	
	Fast transients (Start/Stop interference)		Conforming to IEC 61000-4-4: level 3, 2 kV (1 kV for inputs/outputs)	
	Surge withstand		Conforming to IEC 61000-4-5: level 2, 1 kV	
Materials	Base		Aluminium	
	Housing		Zamak	
	Shaft		Stainless steel	
	Ball bearings		6001ZZ	6807ZZ

Mechanical characteristics

Shaft type			Ø 12, solid shaft (g6)	Ø 30, through shaft (H7)
Maximum rotational speed	Continuous		6000 rpm	3600 rpm
Shaft moment of inertia		**g.cm²**	150	56
Torque		**N.cm**	1	0.8
Maximum load	Radial	**daN**	20	8
	Axial	**daN**	10	5

Electrical characteristics

Connection	Connector		**Encoders with SSI output stage types SB (N), SG (N):** M23, 12-pin male connector
Frequency			**Encoders with SSI output stage types SB (N), SG (N):** 100 to 500 kHz clock
Encoders with type SBN or SGN (Gray) output stage: SSI output without parity, 25-bit clock, 11…30 V supply, binary code (SB) or Gray code (SG)			
Supply voltage			⎓ 11…30 V Maximum ripple: 500 mV
Current consumption, no-load		**mA**	100 maximum
Protection			Against short-circuits and reverse polarity
Output level			Idata = 20 mA |VOD| > 2 V

Schemes

RS 422 data output

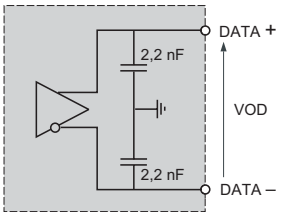

Idata = 20 mA |VOD| > 2 V

Isolated clock input

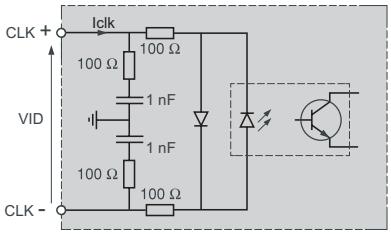

|VID| maximum: 5 V
|Iclk| maximum: 15 mA

DIRECTION input

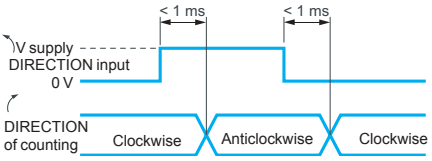

Input stage - Reset to zero

XCC3912P●●●●●

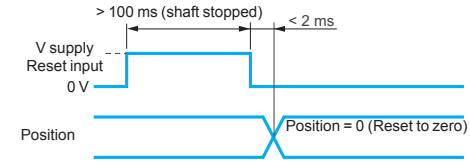

XCC3930T●●●●●

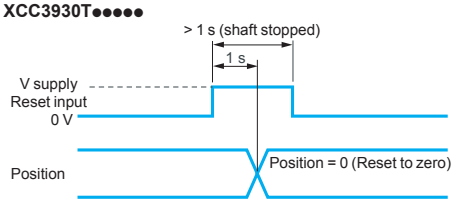

References: page 8/31
Dimensions: page 8/33
Connections: page 8/33

Multiturn absolute encoders

OsiSense XCC

Ø 90 mm encoders

Ø 90 mm multiturn absolute encoders with SSI output convertible to parallel output

The SSI versions can be converted to a parallel version using the deserialisation connecting cable **XCCRM23SUB37●●**, see pages 8/34 and 8/35.

105178

XCC3912PS●●●●

Solid shaft, Ø 12 mm

Resolution	Connection method *(1)*	Output stage type *(2)*	Supply voltage	Reference	Weight kg
8192 points 4096 turns	Connector, radial M23 male	SSI, 25-bit, binary	11…30 V	**XCC3912PS84SBN**	1.840
		SSI, 25-bit, Gray	11…30 V	**XCC3912PS84SGN**	1.840

105179

XCC3930TS●●●●

Through shaft, Ø 30 mm *(3)*

Resolution	Connection method *(1)*	Output stage type *(2)*	Supply voltage	Reference	Weight kg
8192 points 4096 turns	Connector, radial M23 male	SSI, 25-bit, binary	11…30 V	**XCC3930TS84SBN**	1.060
		SSI, 25-bit, Gray	11…30 V	**XCC3930TS84SGN**	1.060

523200

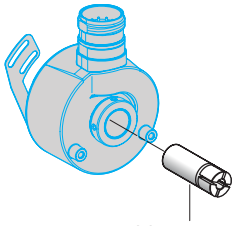

XCCR290RDP●●

Reduction collars for encoders with through shaft, Ø 30 mm

For use with	Diameter	Reference	Weight kg
Encoders with through shaft XCC3930TS84●●●	Ø 12 mm	**XCCR290RDP12**	0.060
	Ø 16 mm	**XCCR290RDP16**	0.060
	Ø 20 mm	**XCCR290RDP20**	0.030
	Ø 25 mm	**XCCR290RDP25**	0.020

*(1) For female connector use **XZCC23FDP120S** or pre-wired connectors (L = 2, 5 or 10 m), see page 8/35.*
(2) For characteristics of the output stage type (indicated by last letter of the reference), see page 8/30.
(3) Anti-rotation device included with encoder.

Multiturn absolute encoders

OsiSense XCC

Ø 58 mm encoders

Ø 58 mm encoders

XCC3506PS84SBN, XCC3506PS84SGN

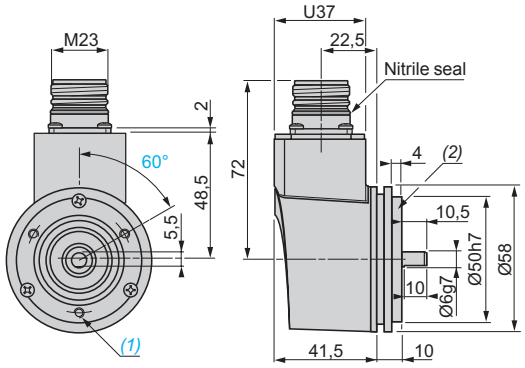

(1) 3 M4 holes at 120° on 42 PCD, depth: 10 mm.
(2) Collar XCCRB1 mounted.

XCC3510PS84SBN, XCC3510PS84SGN

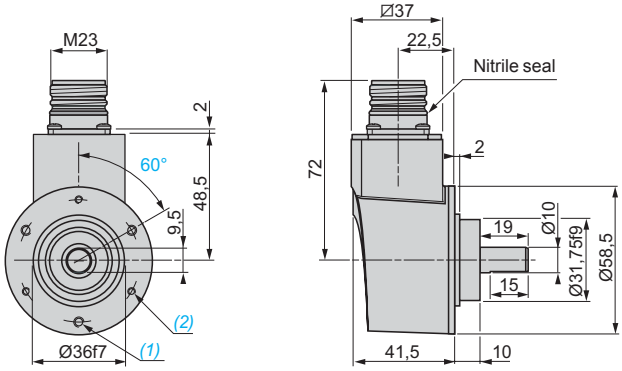

(1) 3 M4 holes at 120° on 48 PCD, depth: 8 mm.
(2) 3 M3 holes at 120° on 48 PCD, depth: 8 mm.

XCC3514TS84SB, XCC3514TS84SG

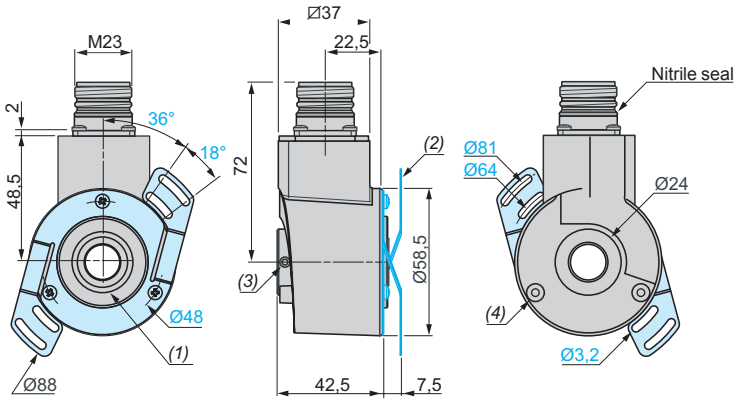

(1) Through shaft, Ø 14 (H7).
(2) Flexible mounting kit, 1 x XCCRF5N mounted.
(3) 2 HC M4 x 4 locking screws.
(4) Hole for M3 x 6 self-threading screw.

XCC3510SPA48SGN

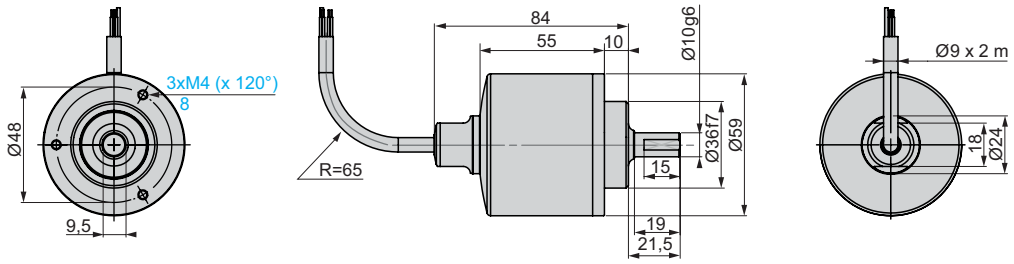

R: minimum bend radius = 65 mm.

8

Multiturn absolute encoders

OsiSense XCC

Ø 58 mm encoders

Ø 90 mm encoders

XCC3912PS84S●N

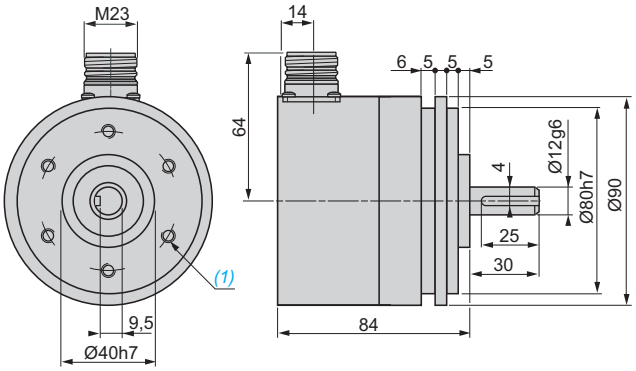

(1) 6 holes M6 x 1 at 120° on 60 PCD, depth: 12 mm maximum.

XCC3930TS84S●N

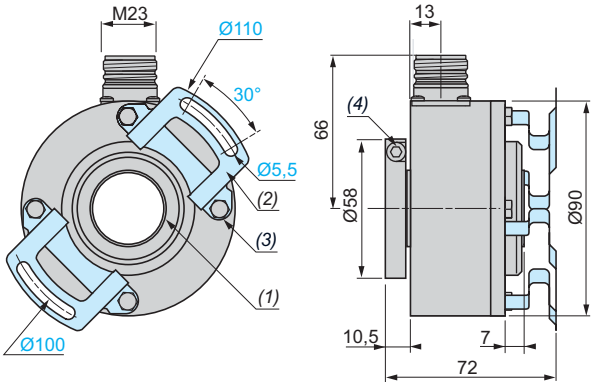

(1) Through shaft, Ø 30 (H7).
(2) Anti-rotation device, 1 x XCCRF9, mounted.
(3) 4 M5 x 6 on 78 PCD.
(4) 3 HC M5 x 6 stainless steel A2 locking screws.

Connector version encoders

Encoder with SSI output (types SBN and SGN)
M23, 12-pin connector, anticlockwise connections

Male connector on encoder (pin view)

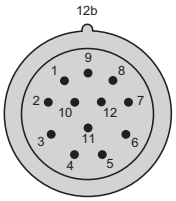

Twisted cable pairs + general shielding must be used.

Pin number	1	2	3	4	5	6	7	8	9	10	11	12
Signal/Supply	0 V	Data +	Clk +	R	Direction (1)	Reset to zero	R	+ V	R	Data –	Clk –	R

R = Reserved (do not connect).
(1) ↻ : Clockwise direction, ↺ : Anticlockwise direction.

Selection of code progression direction

The DIRECTION input enables the code progression to match the rotational direction of the encoder shaft (clockwise or anticlockwise).
Clockwise direction: connect pin 5 to 0 V.
Anticlockwise direction: connect pin 5 to + V.

Reset to zero

The RESET input enables the encoder to be set to the zero position.
It is actuated by applying an 11…30 V DC supply to pin 6, whilst the shaft is stopped, for the following times:
- over 100 ms for XCC3506, XCC3510 and XCC3912,
- over 1 s for XCC3930T.

Following a reset to zero, the pin 6 connection must be re-established to 0 V.

Note: *In environments subject to electrical interference, it is recommended to earth the encoder base using one of the fixing screws.*

Cable version encoder

XCC3510SPA48SGN

Wire colour	BK Black	BN Brown	GN Green	VT Violet	BU Blue	RD Red	OG Orange	YE Yellow
Signal/Supply	0 V	Data +	Clock +	Direction (2)	Reset to zero	+ V	Data -	Clock -

(2) ↻ : Clockwise direction, to 0 V.
↺ : Anticlockwise direction, to + V.

Multiturn absolute encoders

OsiSense XCC

Ø 58 mm and Ø 90 mm encoders

Connection accessories

Connector version multiturn absolute encoders

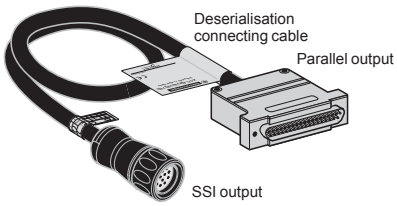

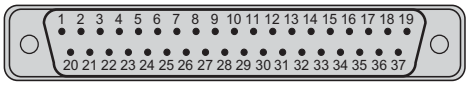

Male connector (pin view)

■ **Selection of code progression direction**
The DIRECTION input enables the code progression to match the rotational direction of the encoder shaft (clockwise or anticlockwise).
Clockwise direction: connect pin 30 to an 11…30 V DC supply.
Anticlockwise direction: connect pin 30 to 0 V.

■ **Reset to zero**
The RESET input enables the encoder to be set to the zero position. It is actuated by applying an 11…30 V DC supply to pin 27 for more than 1 second.

■ **Encoder selection**
The SELECT input enables encoder selection when several units are connected in parallel on the same data bus.
Encoder selected: apply 0 V potential to pin 28.
Encoder not selected: apply 11…30 V DC to pin 28.

■ **Data locking**
The LATCH input, particularly useful for high speed applications, enables the freezing of the encoder data output whilst reading the code.
Function not actuated: apply 0 V potential to pin 29.
Function actuated: apply 11…30 V DC to pin 29.

R = Reserved, do not connect

(1) ↻ : clockwise direction, ↺ : anticlockwise direction.

***Note:** In environments subject to electrical interference, it is recommended to earth the encoder base using one of the fixing screws.*

The deserialisation connecting cable **XCCRM23SUB37●●** (see page 8/35) enables conversion, by simple connection, of encoders **XCC35●●** and **XCC39●●** with SSI output to parallel output.

Characteristics

Supply	⎓ 11 to 30 V
Encoder input/output	Levels RS 422
Parallel outputs	Push-pull protection against short-circuits
Operating temperature	0 to 50 °C

36 x 0.14 mm² shielded cable and SUB-D 37-pin end connector connections

Pin number	Signal
1	2^0 (LSB)
2	2^1
3	2^2
4	2^3
5	2^4
6	2^5
7	2^6
8	2^7
9	2^8
10	2^9
11	2^{10}
12	2^{11}
13	2^{12}
14	2^{13}
15	2^{14}
16	2^{15}
17	2^{16}
18	2^{17}
19	2^{18}
20	2^{19}
21	2^{20}
22	2^{21}
23	2^{22}
24	2^{23}
25	2^{24} (MSB)
26	R
27	Reset to zero
28	Select
29	Latch
30	Direction *(1)* ↻ ↺
31, 32, 33, 34, 35	R
36	+ V
37	0 V

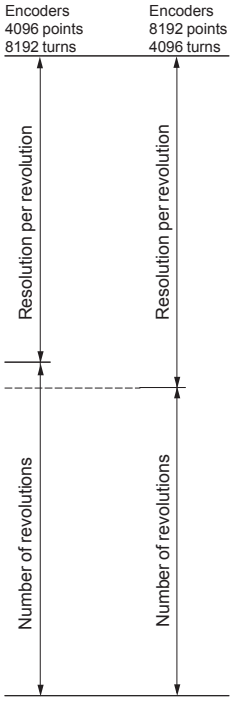

Schemes

LATCH input

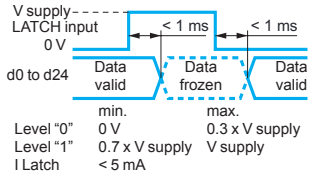

PUSH-PULL

Supply: 11 to 30 V ⎓
Maximum ripple: 500 mV
Protection against reverse polarity
Max. no-load consumption: 50 mA (30 mA typical on 24 V)

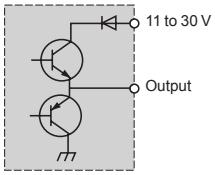

Max. current: 20 mA
Level "0" max.: 1.5 V
Level "1" min.: V supply - 2.5 V
Protection against short-circuits
NPN/PNP compatible

SELECT input

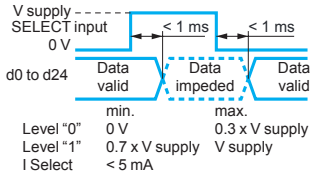

DIRECTION input

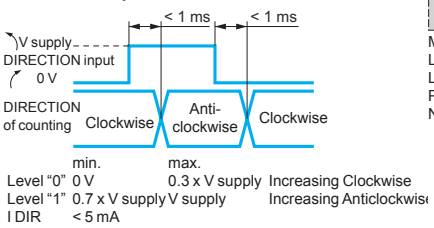

Input stage - Reset to zero

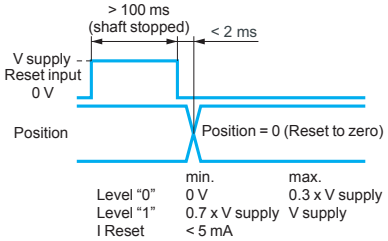

***Note:** Do not neglect the LATCH and SELECT inputs. Connecting them to 0 V makes the outputs active.*

General:
page 8/7

Rotary encoders

OsiSense XCC

Connection accessories

566466

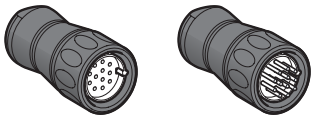

XZCC23FMDP120S

566467

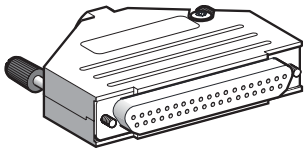

XZCCHFDM370S

105193

XCCRM23SUB37PG

105194

XCCPM23161L2

Cables

Description	For encoders	Number of wires/c.s.a.	Ø mm	Reference	Weight kg
Shielded cables Length: 100 m UL/CSA	Incremental	10 wires/0.14 mm²	6	**XCCRX10**	5.000
	Absolute, single turn //	16 wires/0.14 mm²	6.8	**XCCRX16**	5.600
	Absolute, single turn and multiturn SSI, and incremental	1 twisted pair of 0.50 mm² wires and 3 twisted pairs of 0.14 mm² wires	8.6	**XCCRXS8**	11.750

Connectors

Description	For use with	Number of pins	Type	Reference	Weight kg
M23 female connectors	Encoders Incremental, absolute SSI	12	Straight	**XZCC23FDP120S**	0.040
	Absolute encoders, single turn parallel	16	Straight	**XZCC23FDP160S**	0.040
Connector kit 1 female + 1 male	SSI jumper cable or incremental encoders	–	–	**XZCC23FMDP120S**	0.090
SUB-D 37-pin female connector	Absolute encoders, multiturn parallel	37	Straight	**XZCCHFDM370S**	0.115

Deserialisation jumper cables *(1)*

Description	Type	Reference	Weight kg
M23 F - SUB-D37 M jumper cables, straight M23, cable length 0.5 m	SSI Gray//Gray PNP (PG)	**XCCRM23SUB37PG**	0.225
	SSI Gray//Gray NPN (NG)	**XCCRM23SUB37NG**	0.225
	SSI Binary//Binary PNP (PB)	**XCCRM23SUB37PB**	0.225
	SSI Binary//Binary NPN (NB)	**XCCRM23SUB37NB**	0.225

Pre-wired connectors

Description	Number of wires	Length	Reference	Weight kg
M23 F straight	8 wires Absolute SSI	2 m	**XCCPM23122L2**	0.190
		5 m	**XCCPM23122L5**	0.470
		10 m	**XCCPM23122L10**	0.900
	10 wires Incremental	2 m	**XCCPM23121L2**	0.160
		5 m	**XCCPM23121L5**	0.330
		10 m	**XCCPM23121L10**	0.620
	16 wires Absolute single turn //	2 m	**XCCPM23161L2**	0.175
		5 m	**XCCPM23161L5**	0.415
		10 m	**XCCPM23161L10**	0.790

(1) See General, page 8/7.

Pre-wired connector connections

XCCPM23122L●

Pin	Function	Colour
1	0V	BK
2	Data (+)	BN
3	Clk (+)	GN
4	R	–
5	( )	VT
6	Reset	BU
7	R	–
8	+ V	RD
9	R	–
10	Data (-)	OG
11	Clk (-)	YE
12	R	–

XCCPM23121L●

Pin	Function	Colour
1	A/	BN
2	V Supply	RD
3	Top 0	VT
4	Top 0/	BU
5	B	YE
6	B/	OG
7	R	–
8	A	GN
9	R	–
10	Gnd	BK
11	Gnd	WH
12	V Supply	GY

XCCPM23161L●

Pin	Function	Colour
1	Gnd	WH
2	V Supply	BN
3	d0	GN
4	d1	YE
5	d2	GY
6	d3	OG
7	d4	BU
8	d5	RD
9	d6	BK
10	d7	VT
11	d8	WH/BN
12	d9	WH/GN
13	d10	WH/YE
14	d11	WH/BK
15	d12	WH/OG
16	( )	WH/RD

Direction of rotation for pin 5

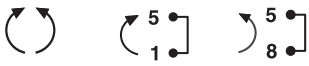

R: reserved, do not connect

Direction of rotation for pin 16

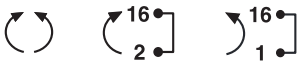

8

Shaft couplings with spring *(1)*

Maximum torque		**N.cm**	300
Maximum angular misalignment			5°
Maximum radial misalignment		**mm**	± 1.5
Materials	Collars		Zamak
	Spring		Nickel plated steel
Compression/Expansion		**mm**	± 1 maximum

Homokinetic (flexible) shaft couplings with bellows

Maximum torque		**N.cm**	80
Maximum angular misalignment			4°
Maximum lateral misalignment		**mm**	± 0.3
Maximum axial misalignment		**mm**	± 0.5
Materials	Bellows		Stainless steel
	Fixing collar		Aluminium
	Screws		Stainless steel

Elastic monobloc shaft couplings

Maximum torque	**N.cm**	20
Maximum angular misalignment		± 2.5°
Maximum radial misalignment	**mm**	± 0.3
Compression/Expansion	**mm**	± 2 maximum
Materials		Glass fibre reinforced polyamide

References

105191

XCCRAR●●●

105192

XCCRAS●●●●

806309

XCCRAE0606

Shaft couplings (for encoders with solid shaft)

Type	Bore diameter (encoder side)	Bore diameter (machine side)	Reference	Weight kg
With spring *(1)*	6 mm	6 mm	**XCCRAR0606**	0.125
		8 mm	**XCCRAR0608**	0.125
		10 mm	**XCCRAR0610**	0.125
		12 mm	**XCCRAR0612**	0.120
		14 mm	**XCCRAR0614**	0.120
		16 mm	**XCCRAR0616**	0.120
	10 mm	8 mm	**XCCRAR1008**	0.120
		10 mm	**XCCRAR1010**	0.120
		12 mm	**XCCRAR1012**	0.110
		14 mm	**XCCRAR1014**	0.110
		16 mm	**XCCRAR1016**	0.105
	12 mm	8 mm	**XCCRAR1208**	0.110
		12 mm	**XCCRAR1212**	0.110
		14 mm	**XCCRAR1214**	0.105
		16 mm	**XCCRAR1216**	0.100
Homokinetic (flexible) with bellows	6 mm	6 mm	**XCCRAS0606**	0.020
		8 mm	**XCCRAS0608**	0.020
		10 mm	**XCCRAS0610**	0.020
		12 mm	**XCCRAS0612**	0.015
		0.25”	**XCCRAS06U25**	0.018
		0.375”	**XCCRAS06U37**	0.016
	10 mm	8 mm	**XCCRAS1008**	0.015
		10 mm	**XCCRAS1010**	0.015
			XCCRAS1010S *(2)*	0.015
		12 mm	**XCCRAS1012**	0.015
			XCCRAS1012S *(2)*	0.015
		0.25”	**XCCRAS10U25**	0.016
		0.375”	**XCCRAS10U37**	0.014
			XCCRAS10U37S *(2)*	0.014
	12 mm	8 mm	**XCCRAS1208**	0.010
		12 mm	**XCCRAS1212**	0.010
		0.25”	**XCCRAS12U25**	0.015
		0.375”	**XCCRAS12U37**	0.013
		0.5”	**XCCRAS12U50**	0.012
Elastic, monobloc	6 mm	6 mm	**XCCRAE0606**	0.010

(1) Not recommended for resolutions higher than 500 points.
(2) Stainless steel 316L version.

Rotary encoders

OsiSense XCC

Mounting and fixing accessories

806311

XCCRF●

566461

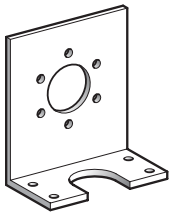

XCCRE9SN

566462

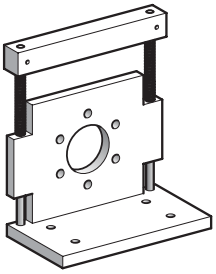

XCCRE●R

566463

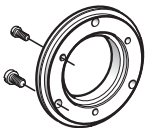

XCCRB1

DF600268

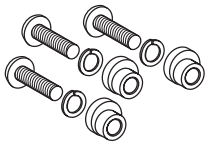

XCCRG●

566464

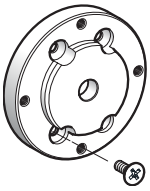

XCCRB2

105188

XCCR158RDA08

105190

XCCR290RDP20

Anti-rotation devices (for encoders with through shaft)

Description	Features	For encoders	Reference	Weight kg
Flexible mounting kit	Set of 2 flexible fixings + screws	Ø 40 XCC1406T	**XCCRF4**	0.010
	1 flexible fixing + screws	Ø 58 XCC15●●T, XCC25●●T, XCC3514T	**XCCRF5N**	0.020
	Set of 2 flexible fixings + screws	Ø 90 XCC19●●T, XCC29●●T, XCC39●●T	**XCCRF9**	0.030

Mounting and fixing accessories (for encoders with solid shaft)

Description	For encoders	Reference	Weight kg
Set of 3 eccentric clamps + 3 fixing screws *(1)* + 3 washers	XCC15●●P, XCC25●●P, XCC35●●P	**XCCRG5**	0.010
	XCC1912P, XCC2912P, XCC3912P	**XCCRG9**	0.030
Plain brackets for Ø 58 *(2)*	XCC1506, XCC2506	**XCCRE5S**	1.300
	XCC1510P, XCC2510P, XCC3510P	**XCCRE5SN**	0.130
Fixing collar (2”) for Ø 58 mm	XCC1510, XCC2510, XCC3510	**XCCRB6**	0.060
Plain brackets for Ø 90 *(2)*	XCC1912P, XCC2912P, XCC3912P	**XCCRE9SN**	0.290
Brackets with play compensator *(2)*	XCC1510P, XCC2510P, XCC3510PS●●S●●	**XCCRE5RN**	0.345
	XCC1912P, XCC2912P, XCC3912P	**XCCRE9RN**	0.890
Collar for synchro mounting, for Ø 58 *(2)*	XCC1510P, XCC2510P, XCC3510P	**XCCRB1**	0.040
Substitution interface collar for Ø 90 *(2)*	XCC1912P, XCC2912P, XCC3912P	**XCCRB2**	0.175
IP 67 sealed collar for Ø 58 *(2)*	XCC1510P, XCC2510P, XCC3510PS●●S●N	**XCCRB3**	0.030

Reduction collars for encoders with through shaft

Description	For use with	Reduction	Reference	Weight kg
Reduction collars	Incremental encoders Ø 58 Absolute single turn encoders Ø 58 Absolute multiturn encoders Ø 58	14 mm to 6 mm	**XCCR158RDA06**	0.015
		14 mm to 8 mm	**XCCR158RDA08**	0.010
		14 mm to 10 mm	**XCCR158RDA10**	0.010
		14 mm to 12 mm	**XCCR158RDA12**	0.010
		14 mm to 0.375”	**XCCR158RDAU37**	0.011
		14 mm to 0.5”	**XCCR158RDAU50**	0.007
	Incremental encoders Ø 90 Absolute single turn and multiturn encoders Ø 90	30 mm to 12 mm	**XCCR290RDP12**	0.060
		30 mm to 16 mm	**XCCR290RDP16**	0.060
		30 mm to 20 mm	**XCCR290RDP20**	0.030
		30 mm to 25 mm	**XCCR290RDP25**	0.020
		30 mm to 0.375”	**XCCR290RDPU37**	0.080
		30 mm to 0.5”	**XCCR290RDPU50**	0.060
		30 mm to 0.75”	**XCCR290RDPU75**	0.030
		30 mm to 1”	**XCCR290RDPU1**	0.018

(1) 3 M3 x 12 screws for XCCRG5, 3 M4 x 25 screws for XCCRG9.
(2) Screws included with brackets and collars.

Shaft couplings

XCCRAR●●●●

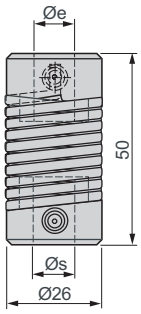

Reference	Ø e	Ø s
XCCRAR0606	6 mm	6 mm
XCCRAR0608	6 mm	8 mm
XCCRAR0610	6 mm	10 mm
XCCRAR0612	6 mm	12 mm
XCCRAR0614	6 mm	14 mm
XCCRAR0616	6 mm	16 mm
XCCRAR1008	10 mm	8 mm
XCCRAR1010	10 mm	10 mm
XCCRAR1012	10 mm	12 mm
XCCRAR1014	10 mm	14 mm
XCCRAR1016	10 mm	16 mm
XCCRAR1208	12 mm	8 mm
XCCRAR1212	12 mm	12 mm
XCCRAR1214	12 mm	14 mm
XCCRAR1216	12 mm	16 mm

XCCRAS●●●●

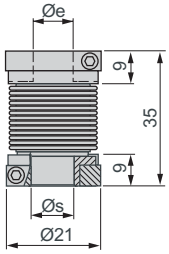

Reference	Ø e	Ø s
XCCRAS0606	6 mm	6 mm
XCCRAS0608	6 mm	8 mm
XCCRAS0610	6 mm	10 mm
XCCRAS0612	6 mm	12 mm
XCCRAS1008	10 mm	8 mm
XCCRAS1010	10 mm	10 mm
XCCRAS1010S	10 mm	10 mm
XCCRAS1012	10 mm	12 mm
XCCRAS1012S	10 mm	12 mm
XCCRAS1208	12 mm	8 mm
XCCRAS1212	12 mm	12 mm
XCCRAS06U25	6 mm to 0.25”	
XCCRAS06U37	6 mm to 0.375”	
XCCRAS10U25	10 mm to 0.25”	
XCCRAS10U37	10 mm to 0.375”	
XCCRAS10U37S	10 mm to 0.375”	
XCCRAS12U25	12 mm to 0.25”	
XCCRAS12U37	12 mm to 0.375”	
XCCRAS12U50	12 mm to 0.5”	

XCCRAE0606

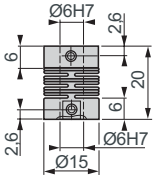

Anti-rotation devices (flexible mounting kit)

XCCRF4

Mounting on Ø 40 mm encoder XCC1406T

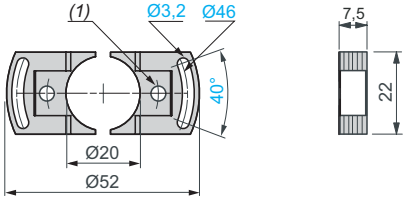

(1) 2 holes Ø 4 at 180° on 30 PCD. TC M4 x 5 screw fixings.

XCCRF5N

Mounting on Ø 58 mm encoders XCC1514T, XCC2514T and XCC3514T

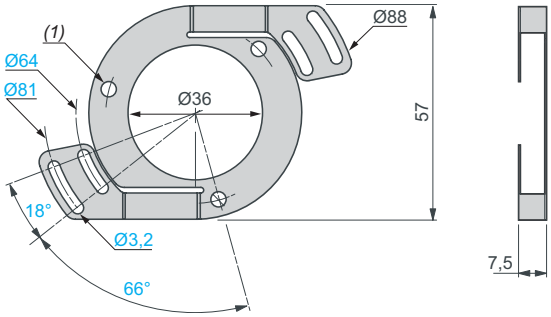

(1) 3 holes Ø 4.1 at 120° on 48 PCD. TC M3 x 6 screw fixings.

XCCRF9

Mounting on Ø 90 mm encoders XCC1930T, XCC2930T and XCC3930T

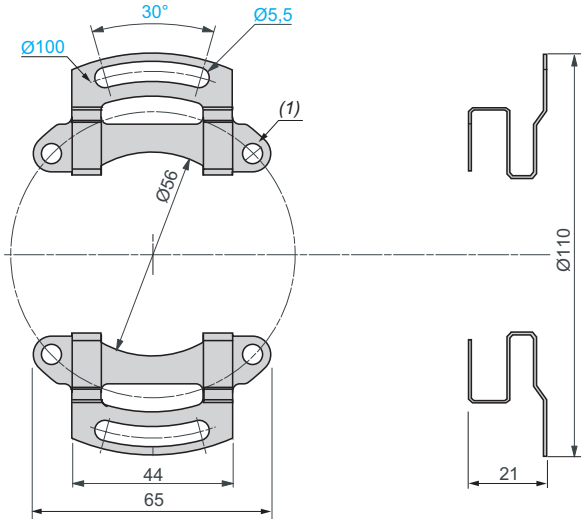

(1) 4 holes Ø 5.2 at 90° on 78 PCD. TH M5 x 6 screw fixings.

Collar kits

XCCRB1

Collar for synchro mounting, for Ø 58 encoders:
XCC15●●P, XCC25●●P and XCC35●●P

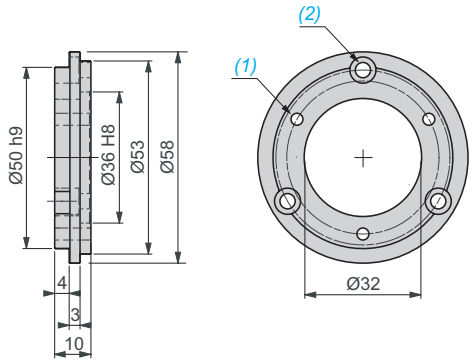

(1) 3 holes M4 x 0.7 at 120° on 42 PCD. TC M3 x 8 screw fixings.
(2) 3 counterbored holes for TC M4 x 8 screws at 120° on 48 PCD.

XCCRB2

Interface collar for Ø 90 encoders:
XCC1912P, XCC2912P, XCC3912P

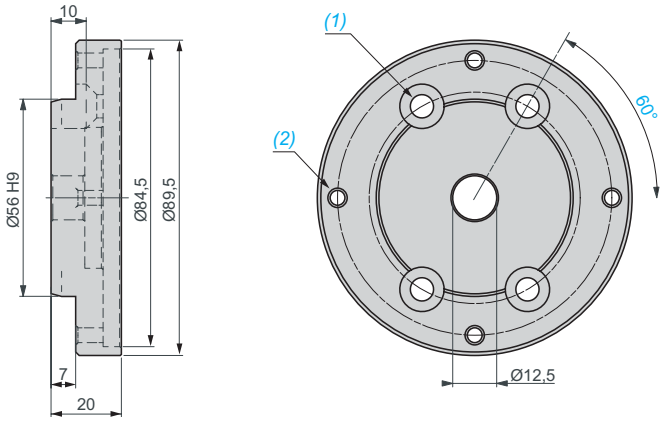

(1) 4 holes Ø 6.6 at 120° on 60 PCD. Countersunk for TZ M6 x 16 screws.
(2) 4 holes M5 x 0.8 at 90° on 78 PCD.

XCCRB3

IP 67 sealed collar for Ø 58 encoders:
XCC1510P, XCC2510P and XCC3510PS●●S●N

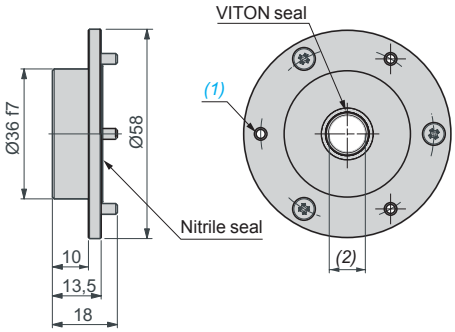

(1) 3 holes M3 x 0.5 at 120°on 48 PCD. TZ M3 x 8 screw fixings.
(2) Shaft Ø 10 mm.

Fixing collar XCCRB6

Fixing collar fixation 2" for Ø 58 encoders:
XCC1510, XCC2510 and XCC3510

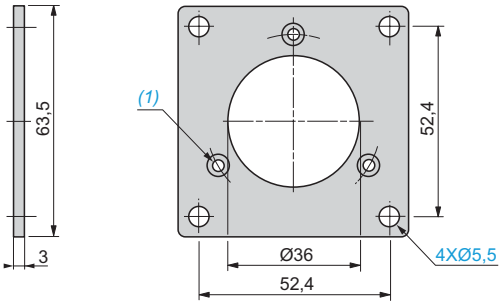

(1) 3 holes M3.2 at 120° on Ø 48 mm.

Plain brackets

XCCRE5S

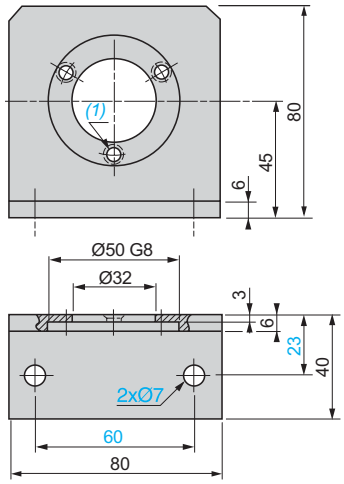

(1) 3 holes Ø 4.5 at 120° on 42 PCD.

XCCRE5SN

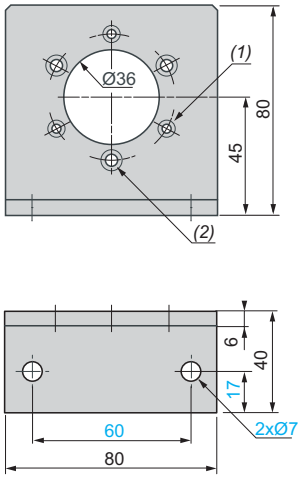

3 CHC M3 x 8 screws included.
(1) 3 counterbored holes for CHC M3 screws at 120° on 48 PCD.
(2) 3 counterbored holes for CHC M4 screws at 120° on 48 PCD.

XCCRE9SN

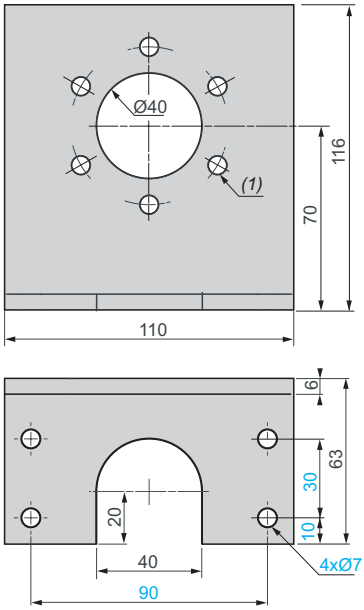

(1) 6 holes Ø 7 for CHC M6 screws at 60° on 60 PCD.

Brackets with play compensator

XCCRE5RN

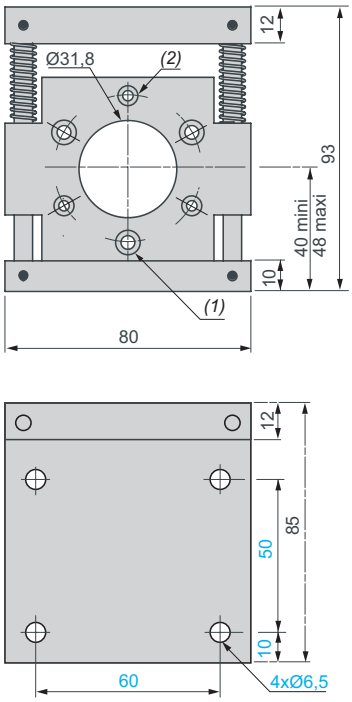

CHC M3 x 12 screws included
(1) 3 counterbored holes for CHC M3 screws at 120° on 48 PCD.
(2) 3 counterbored holes for CHC M4 screws at 120° on 48 PCD.

XCCRE9RN

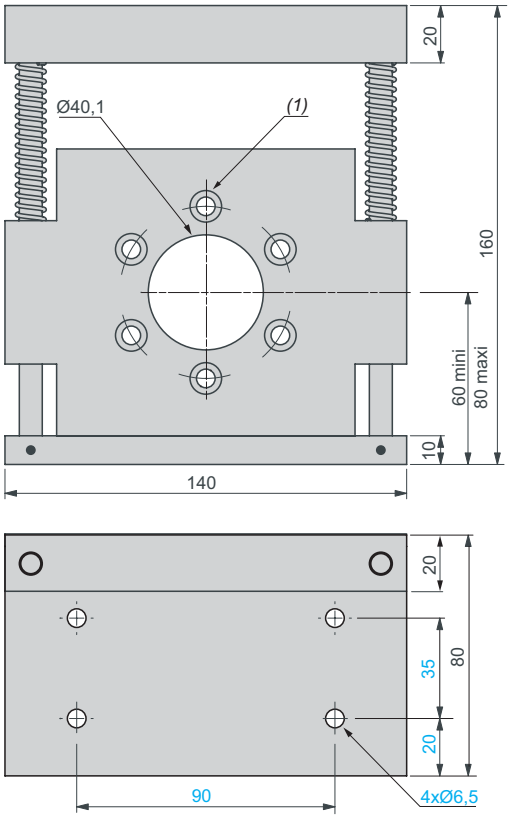

(1) 6 counterbored holes for CHC M6 screws at 120° on 60 PCD.

Reduction collars for through shaft

XCCR158RDA●●

For Ø 58 incremental and absolute single turn and multiturn encoders

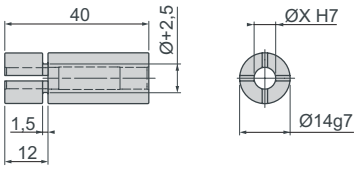

Reference	Ø
XCCR158RDA06	6 mm
XCCR158RDA08	8 mm
XCCR158RDA10	10 mm
XCCR158RDA12	12 mm
XCCR158RDAU37	0.375”
XCCR158RDAU50	0.5”

XCCR290RDP●●

For Ø 90 incremental and absolute single turn and multiturn encoders

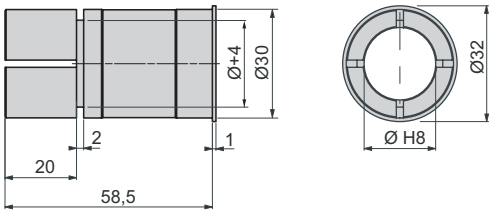

Reference	Ø
XCCR290RDP12	12 mm
XCCR290RDP16	16 mm
XCCR290RDP20	20 mm
XCCR290RDP25	25 mm
XCCR290RDPU37	0.375”
XCCR290RDPU50	0.5”
XCCR290RDPU75	0.75”
XCCR290RDPU1	1”

Multiturn absolute encoders on bus

OsiSense XCC

CANopen Ø 58 mm encoders

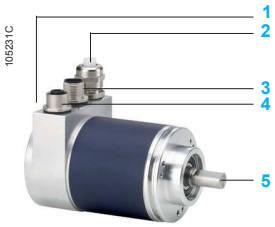

1 2 LEDs
2 PG9 cable gland for supply cable
3 M12 male connector (CANopen incoming bus)
4 M12 female connector (CANopen outgoing bus)
5 Encoder shaft

Presentation

The OsiSense XCC CANopen multiturn absolute Ø 58 mm encoder is designed to meet the requirements for configurations encountered in communicating industrial installations. Models **XCC3510PS84CBN** and **XCC3515CS84CBN** integrate CANopen communication protocols as standard.

The CAN-Bus interface integrated in the absolute rotary encoder supports all CANopen functions. The following modes can be programmed and made operational or stopped: Pooling mode, Cyclic mode and Sync mode. The application specific protocol supports the programming of the following additional functions:
- code sequence,
- resolution per revolution,
- global resolution,
- presets,
- speed and address.

The connection housing ensures simple assembly and addressing. It performs the function of a T coupler and has M12 connectors for the bus incoming and outgoing signals.
The rotary encoder can be supplied via the CANopen bus or by using the dedicated PG9 cable gland. The address of the equipment is adjusted from the rotary switches.
Encoders **XCC3510PS84CBN** and **XCC3515CS84CBN** have 2 LEDs located on the rear face of the housing to facilitate monitoring and diagnostics conforming to standard DR303-3 v1.3.0 (CIA). The LEDs provide information regarding the operative mode, bus errors, supply problems.

Standards

Encoders **XCC3510PS84CBN** and **XCC3515CS84CBN** conform to:
- standard ISO 11898,
- specifications DS301 V4.02/CAN2.A, DS406 V3.2, DR303-1 V1.7 (cabling and connector), DR303-3 V1.3 (light indicator).

They are CiA certified and meet the requirements of the Schneider Electric interoperability standards.

Encoder setting-up/configuration software

The CANopen bus is configured with the aid of SyCon version 2.9 software, reference SYC SPU LF, to be ordered separately.
The EDS file, reference TEXCC35CBN_0101E.eds, required for encoder configuration can be downloaded from our website www.tesensors.com.

Configurable parameters

■ **Transmission speed**
Default value: 250 Kbaud, configurable from 10 Kbaud (distance 6700 m) to 1 Mbaud (distance 12 m).
■ **Address**
defines encoder identification on the bus, 1 to 99. Default value: id = 1. It is defined using 2 coding wheels located in the housing.
■ **Resolution**
defines the number of points per revolution (0 to 8191).
■ **Global resolution**
defines the total number of codes of the encoder (0 to 33,554,431).
■ **Direction**
enables defining of the counting direction of the encoder (increasing clockwise or anticlockwise) in relation to its mechanical position.
■ **Reset to X**
defines the value of its actual position (reset to X or reset to amount).

Communication modes

■ **Pooling mode**
The encoder responds to requests from the master. This mode enables programming and reading to the encoder parameters whilst in position.
■ **Cyclic mode**
The encoder transmits its data cyclically. The transmission period is programmable from 0 to 65,535 ms.
■ **Sync mode**
The encoder transmits its data when the master sends a synchro.

Characteristics: page 8/43
References: page 8/44
Dimensions: page 8/45
Connections: page 8/45

Multiturn absolute encoders on bus

OsiSense XCC

CANopen Ø 58 mm encoders

Characteristics				
Encoder type			**XCC3510PS84CBN**	**XCC3515CS84CBN**
Conformity			CE	
Temperature	Operation (housing)	**°C**	- 40…+ 85	
	Storage	**°C**	- 40…+ 85	
Degree of protection	Conforming to IEC 60529		IP 64	
Vibration resistance	Conforming to IEC 60068-2-6		10 gn (f = 10…2 kHz)	
Shock resistance	Conforming to IEC 60068-2-27		100 gn (6 ms, 1/2 sine wave)	
Resistance to electromagnetic interference	Electrostatic discharges		Conforming to IEC 61000-4-2: level 2, 4 kV air; 2 kV contact	
	Radiated electromagnetic fields (electromagnetic waves)		Conforming to IEC 61000-4-3: level 3, 10 V/m	
	Fast transients (Start/Stop interference)		Conforming to IEC 61000-4-4: level 3, 2 kV (1 kV for inputs/outputs)	
	Surge withstand		Conforming to IEC 61000-4-5: level 1, 500 V	
Materials	Base		Aluminium	
	Housing		Aluminium	
	Shaft		Stainless steel	
	Ball bearings		6000ZZ1	6803ZZ
Mechanical characteristics				
Shaft type		**mm**	Ø 10, solid shaft (h8)	Ø 15, hollow shaft (F7)
Maximum rotational speed	Continuous		6000 rpm	
Shaft moment of inertia		**g.cm²**	30	
Torque		**N.cm**	3	
Maximum load	Radial	**daN**	11	
Electrical characteristics				
Connection	Connector		CANopen bus network by M12 connector (input: male; output: female), 5-pin, A coding. Supply via PG9 of the encoder	
Frequency		**kHz**	800	
Supply	Nominal voltage	**V**	⎓ 24 (10-30) Recommended PELV supply (Protective Extra Low Voltage)	
Current consumption, no-load		**mA**	100 maximum	
Protection			Against reverse polarity and voltage surges	
Signalling			Green LED: CAN_RUN; red LED: CAN_ERR	
Communication				
CANopen service	Conformity class		S10 (Transparent Ready)	
	Profile		DS406 V3.1, class C2	
	Specifications		ISO 11898, DS301 V4.02/CAN2.A, DR303-1 V1.7, DR303-3 V1.3.	
Structure	Speed	**Kbps**	10, 20, 50, 125, 250, 500, 800 and 1000	
Product certification			CiA Schneider Electric interoperability standards	
Distance depending on speed			250 m at 250 kbps, 100 m at 500 kbps, 30 m at 800 kbps, 12 m at 1000 kbps	

Multiturn absolute encoders on bus

OsiSense XCC

CANopen Ø 58 mm encoders

105231C

XCC3510PS84CBN

105232C

XCC3515CS84CBN

514216

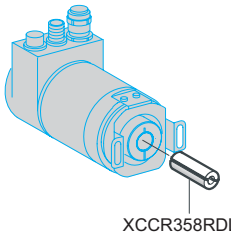

XCCR358RDL●●

105507

TSXCANCA●●

DF504022

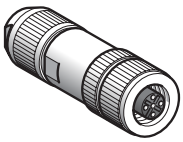

XZCC12FDB50R

DF504021

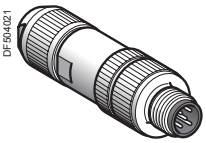

XZCC12MDB50R

CANopen Ø 58 mm encoders

Description	Connection method	Output stage type	Supply voltage	Reference	Weight kg
Solid shaft, Ø 10 mm					
Ø 58 mm multiturn absolute CANopen bus encoder Resolution 8192 pts/ 4096 turns	Radial 2 x M12 connectors A coding 1 x PG9	CANopen, 25-bit, binary	11…30 V	**XCC3510PS84CBN**	0.560
Hollow shaft, Ø 15 mm *(1)*					
Ø 58 mm multiturn absolute CANopen bus encoder Resolution 8192 pts/ 4096 turns	Radial 2 x M12 connectors A coding 1 x PG9	CANopen, 25-bit, binary	11…30 V	**XCC3515CS84CBN**	0.570

Reduction collars for encoders with hollow shaft, Ø 15 mm

For use with	Diameter	Reference	Weight kg
Encoder with hollow shaft XCC3515CS84CBN	Ø 6 mm	**XCCR358RDL06**	0.040
	Ø 8 mm	**XCCR358RDL08**	0.030
	Ø 10 mm	**XCCR358RDL10**	0.025
	Ø 12 mm	**XCCR358RDL12**	0.020
	Ø 14 mm	**XCCR358RDL14**	0.010
	0.375”	**XCCR358RDLU37**	0.011
	0.5”	**XCCR358RDLU50**	0.007

Connection accessories for CANopen bus

Connecting cables for CANopen bus

Description	Length m	Reference	Weight kg
Connecting cables fitted with 2 straight type M12 connectors, A coding	1	**TCSMCN1M1F1**	0.080
	2	**TCSMCN1M1F2**	0.115
	5	**TCSMCN1M1F5**	0.520
	10	**TCSMCN1M1F10**	0.520

CANopen cables

Description	Length	Unit reference	Weight kg
Standard CANopen cables conforming to IEC 60332-1	50 m	**TSXCANCA50**	4.930
	100 m	**TSXCANCA100**	8.800
	300 m	**TSXCANCA300**	24.560
CANopen cables for severe environments *(2)* **or moving installations,** CE marking: low smoke emission. Halogen free. No flame propagation (IEC 60332-1). Resistance to oils.	50 m	**TSXCANCD50**	3.510
	100 m	**TSXCANCD100**	7.770
	300 m	**TSXCANCD300**	21.760

Shielded connectors, cabled by user

Description	Type	Unit reference	Weight kg
M12 female connector 5 spring terminals	Straight	**XZCC12FDB50R**	0.020
M12 male connector 5 spring terminals	Straight	**XZCC12MDB50R**	0.025

(1) Anti-rotation device included with encoder.

(2) Severe environment:
- *resistance to hydrocarbons, industrial oils, detergents, weld spatter,*
- *relative humidity up to 100 %,*
- *saline atmosphere,*
- *extreme variations in temperature,*
- *operating temperature between - 10 °C and + 70 °C,*
- *moving installation.*

Characteristics: page 8/43
Dimensions: page 8/45
Connections: page 8/45

Multiturn absolute encoders on bus

OsiSense XCC

CANopen Ø 58 mm encoders

Dimensions

XCC3510PS84CBN

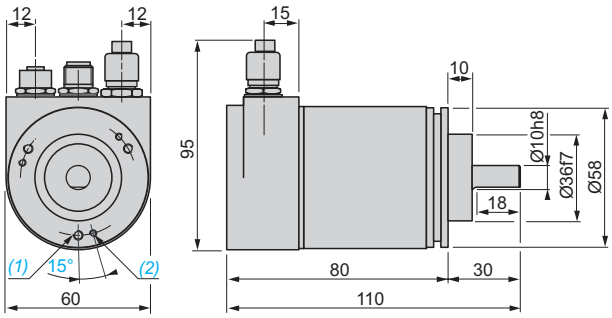

(1) 3 M4 holes at 120° on 48 PCD, depth: 6 mm.
(2) 3 M3 holes at 120° on 48 PCD, depth: 6 mm.

XCC3515CS84CBN

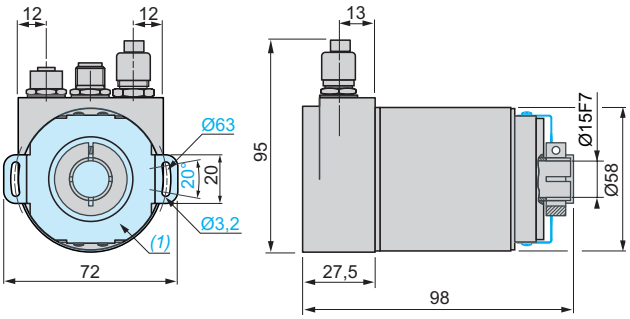

(1) Flexible mounting kit, 1 x XCCRF5B mounted.

Connections

CANopen

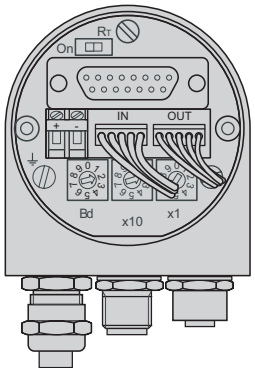

Bus termination resistor

1st or last encoder

Encoder X

Permissible address range

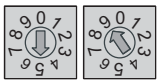

1 => 99
0 => reserve

x10 x1

Example: 59

Bus IN
M12 male connector

Bus OUT
M12 female connector

Pin	1	2	3	4	5
Function	CAN_SHLD	(CAN_V+)	CAN_GND	CAN_H	CAN_L

Terminal	+	–
Function	24 V	0 V

Multiturn absolute encoders on bus

OsiSense XCC

PROFIBUS-DP Ø 58 mm encoders

105233

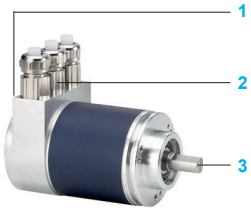

1 2 LEDs
2 PG9 cable gland for supply cable
3 Encoder shaft

Presentation

The OsiSense XCC PROFIBUS-DP multiturn absolute Ø 58 mm encoder is designed to meet the requirements for configurations encountered in communicating industrial installations. Models **XCC3510PV84FBN** and **XCC3515CV84FBN** integrate PROFIBUS-DP communication protocols as standard.

The PROFIBUS-DP bus interface integrated in the absolute rotary encoder is based on RS 485 transmission and enables speeds of up to 12 Mbps. Exchanges are possible from the master to the encoder. The application specific protocol DP-V0 conforms to the class 2 profile for encoders and supports the following functions:
- code sequence,
- resolution per revolution,
- global resolution,
- presets,
- soft stops,
- speed and address.

The housing of the encoders provides easy access to 2 coding wheels for configuration of the address. 2 LEDs are integrated to facilitate diagnostics. It performs the function of a T coupler with 3 x PG9 cable glands (2 for the bus incoming and outgoing signals, 1 for the encoder supply).
PROFIBUS-DP encoders have 2 LEDs to indicate the encoder status:
- Green LED: “Sta”
- Red LED: “Err”.

Standards

PROFIBUS-DP encoders **XCC3510PV84FBN** and **XCC3515CV84FBN** conform to:
- international standards IEC 61158 and IEC 61784 for PROFIBUS-DP communication
- the PROFIBUS-DP standard EN 50170 Class 2 in accordance with profile 3.062 V 1.1 for the encoder application.
They are certified by the PNO organisation and meet the requirements of the Schneider Electric interoperability standards.

Encoder setting-up/configuration software

The PROFIBUS-DP bus is configured with the aid of SyCon version 2.9 software, reference SYC SPU LF, to be ordered separately.
The GSD “gsd file” required for encoder configuration can be downloaded from our website www.tesensors.com, under reference TELE4711.GSD.

Configurable parameters

■ **Speed**
defines the instantaneous speed in 16-bit binary. It can be data according to 1 of 4 modes:
□ Steps/10 ms,
□ Steps/100 ms,
□ Steps/s or rpm.

■ **Address**
Addressing is performed using 2 coding wheels located in the housing. The addresses possible are 1 to 99.

■ **Resolution**
defines the number of points per revolution (0 to 8191)

■ **Global resolution**
defines the total number of codes of the encoder (0 to 33,554,431)

■ **Direction**
enables defining of the counting direction of the encoder (increasing clockwise or anticlockwise) in relation to its mechanical position

■ **2 soft stops**
one high stop and one low stop can be defined and extracted from the position word

■ **Reset to X**
defines the value of its actual position (reset to X or reset to amount).

Communication modes

2 communication modes are possible:
- simple and fast, cyclic and deterministic exchanges between the master and the encoder,
- acyclic exchanges.

Characteristics: page 8/47
References: page 8/48
Dimensions: page 8/49
Connections: page 8/49

Multiturn absolute encoders on bus

OsiSense XCC

PROFIBUS-DP Ø 58 mm encoders

Characteristics

Encoder type			XCC3510PV84FBN	XCC3515CV84FBN
Conformity			DIN VDE 0160	
Temperature	Operation (housing)	**°C**	- 40…+ 85	
	Storage	**°C**	- 40…+ 85	
Degree of protection	Conforming to IEC 60529		IP 64	
Vibration resistance	Conforming to IEC 60068-2-6		10 gn (f = 10…2 kHz)	
Shock resistance	Conforming to IEC 60068-2-27		100 gn (6 ms, 1/2 sine wave)	
Resistance to electromagnetic interference	Electrostatic discharges		Conforming to IEC 61000-4-2: level 2, 4 kV air; 2 kV contact	
	Radiated electromagnetic fields (electromagnetic waves)		Conforming to IEC 61000-4-3: level 3, 10 V/m	
	Fast transients (Start/Stop interference)		Conforming to IEC 61000-4-4: level 3, 2 kV (1 kV for inputs/outputs)	
	Surge withstand		Conforming to IEC 61000-4-5: level 1, 500 V	
Materials	Base		Aluminium	
	Housing		Aluminium	
	Shaft		Stainless steel	
	Ball bearings		6000ZZ1	6803ZZ

Mechanical characteristics

Shaft type		**mm**	Ø 10, solid shaft (h8)	Ø 15, hollow shaft (F7)
Maximum rotational speed			6000 rpm	
Shaft moment of inertia		**g.cm²**	30	
Torque		**N.cm**	3	
Maximum load	Radial	**daN**	11	

Electrical characteristics

Connection	Via PG9		3 x PG9 entries: - 2 x PG9 entries for the PROFIBUS-DP bus - 1 x PG9, positioned in middle, for external supply (10-30 V) Due to the T integrated in the housing, the supply can be distributed on the bus. Connections are made using screw terminals.
Frequency		**kHz**	800
Supply	Nominal voltage	**V**	⎓ 24 (10-30) Recommended PELV supply (Protective Extra Low Voltage)
Current consumption, no-load		**mA**	100
Protection			Against reverse polarity and voltage surges
Signalling			Green LED: “Sta”; red LED: “Err”

Communication

PROFIBUS-DP V0 service	Profile for encoder		3.062 V1.1.
	Specifications		IEC 61158, IEC 61784, EN 50170 class 2, EN 50254
Interface			RS 485
Speed			9.6 Kbps…12 Mbps maximum
Product certification			PNO Schneider Electric interoperability standards

Multiturn absolute encoders on bus

OsiSense XCC

PROFIBUS-DP Ø 58 mm encoders

105233

XCC3510PV84FBN

105236

XCC3515CV84FBN

514217

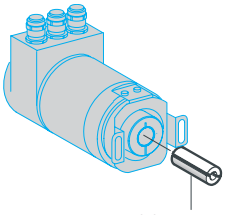

XCCR358RDL●●

References

Description	Connection method	Output stage type	Supply voltage	Reference	Weight kg
Solid shaft, Ø 10 mm					
Ø 58 mm multiturn absolute PROFIBUS-DP encoder Resolution 8192 pts/ 4096 turns	3 x PG9 radial	PROFIBUS-DP, 25-bit, binary	11…30 V	**XCC3510PV84FBN**	0.560
Hollow shaft, Ø 15 mm *(1)*					
Ø 58 mm multiturn absolute PROFIBUS-DP encoder Resolution 8192 pts/ 4096 turns	3 x PG9 radial	PROFIBUS-DP, 25-bit, binary	11…30 V	**XCC3515CV84FBN**	0.570

Reduction collars for encoders with hollow shaft, Ø 15 mm

For use with	Diameter	Reference	Weight kg
Encoder with hollow shaft XCC3515CV84FBN	Ø 6 mm	**XCCR358RDL06**	0.040
	Ø 8 mm	**XCCR358RDL08**	0.030
	Ø 10 mm	**XCCR358RDL10**	0.025
	Ø 12 mm	**XCCR358RDL12**	0.020
	Ø 14 mm	**XCCR358RDL14**	0.010
	Ø 0.375”	**XCCR358RDLU37**	0.011
	Ø 0.5”	**XCCR358RDLU50**	0.007

(1) Anti-rotation device included with encoder.

8

Presentation: page 8/46
Characteristics: page 8/47
Dimensions: page 8/49
Connections: page 8/49

PROFIBUS-DP Ø 58 mm encoders

XCC3510PV84FBN

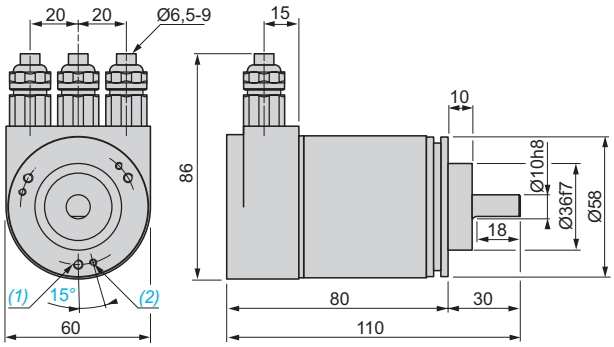

(1) 3 M4 holes at 120° on 48 PCD, depth: 6 mm.
(2) 3 M3 holes at 120° on 48 PCD, depth: 6 mm.

XCC3515CV84FBN

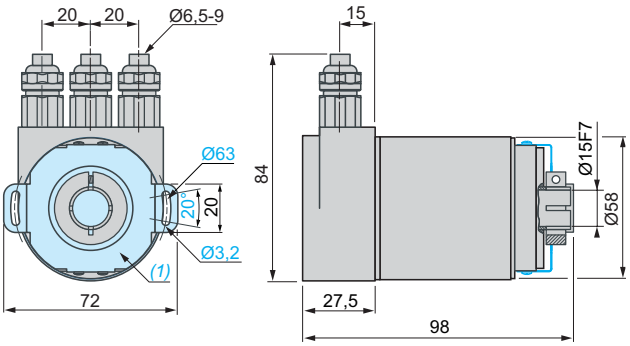

(1) Flexible mounting kit, 1 x XCCRF5B mounted.

Connections

PROFIBUS-DP

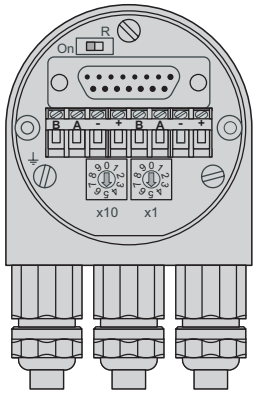

Bus termination resistor

1st or last encoder — Encoder X

Permissible address range

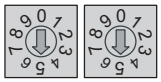

0 => 99

Example: 55

Terminal	⏚	**B** (left)	**A** (left)	**–**	**+**
Function	Earth	Bus line B (Bus in)	Bus line A (Bus in)	0 V	11-30 V
Terminal		**B** (right)	**A** (right)	**–**	**+**
Function		Bus line B (Bus out)	Bus line A (Bus out)	0 V	11-30 V

Homokinetic (flexible) shaft couplings with bellows

Maximum torque		**N.cm**	80
Maximum angular misalignment			4°
Maximum lateral misalignment		**mm**	± 0.3
Maximum axial misalignment		**mm**	± 0.5
Materials	Bellows		Stainless steel
	Fixing collar		Aluminium
	Screws		Stainless steel

References

105192

XCCRAS●●●●

Shaft couplings (for encoders with solid shaft)

Type	Bore diameter (encoder side)	Bore diameter (machine side)	Reference	Weight kg
Homokinetic (flexible) with bellows	10 mm	8 mm	**XCCRAS1008**	0.015
		10 mm	**XCCRAS1010**	0.015
		12 mm	**XCCRAS1012**	0.015

Anti-rotation devices (for encoders with hollow shaft)

Description	Features	For encoders	Reference	Weight kg
Flexible mounting kit	1 flexible fixing + screws	CANopen and PROFIBUS-DP	**XCCRF5B**	0.010

105189

XCCR358RDL06

Reduction collars for encoders with hollow shaft

Description	For use with	Reduction	Reference	Weight kg
Reduction collars	CANopen and PROFIBUS-DP encoders	15 mm to 6 mm	**XCCR358RDL06**	0.040
		15 mm to 8 mm	**XCCR358RDL08**	0.030
		15 mm to 10 mm	**XCCR358RDL10**	0.025
		15 mm to 12 mm	**XCCR358RDL12**	0.020
		15 mm to 14 mm	**XCCR358RDL14**	0.010
		15 mm to 0.375”	**XCCR358RDLU37**	0.011
		15 mm to 0.5”	**XCCR358RDLU50**	0.007

Shaft couplings

XCCRAS●●●●

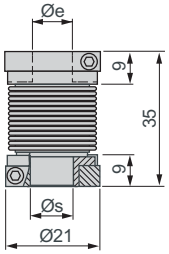

Reference	Ø e	Ø s
XCCRAS1008	10	8
XCCRAS1010	10	10
XCCRAS1012	10	12

Anti-rotation device

XCCRF5B

Mounting on Ø 58 mm CANopen and PROFIBUS-DP encoders XCC3510●●●FBN, XCC3510●●●CBN, XCC3515C●●●FBN, XCC3515C●●●CBN

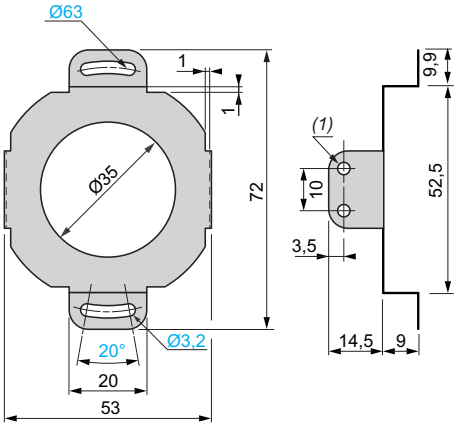

(1) 4 holes Ø 3.2. M3 x 6 screw fixings.

Reduction collars

XCCR358RDL●●

For CANopen and PROFIBUS-DP encoders

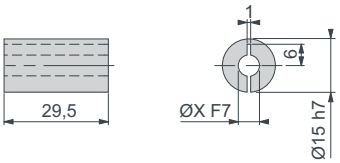

Reference	Ø
XCCR358RDL06	6 mm
XCCR358RDL08	8 mm
XCCR358RDL10	10 mm
XCCR358RDL12	12 mm
XCCR358RDL14	14 mm
XCCR358RDLU37	0.375”
XCCR358RDLU50	0.5”